Transmittal, reproduction, dissemination and/or editing of this document as well as utilization of its contents and communication thereof to others without express authorization are prohibited.
未经允许禁止传输、复制、编辑该文档，以及利用其内容进行交流

REVISION RECORD				
REV	CN	DESCRIPTION	DRFT	DATE

General information:
1.Material: Aluminium die-cast
2.Materia, coverl: Aluminium die-cast
3.Colour: Grey
4.Surface: Powder-coated
5.Operating temperature: -40℃~+125℃
6.Degree of protection acc.to DIN EN60529 for coupled connector: IP65
7.Outgoing direction: Bottom entry
8.Locking element:
Locking type: Single locking latch
Material: Metal galvanized/nickel plating
9.Hoods&Housings seal: NBR
10.Undimensioned Tolerances:

Pitch Range In mm			Nominal Dimension Range In mm						
TO 6	Over 6 TO 10	Over 10 TO 24	TO 30	Over 30 TO 60	Over 60 TO 100	Over 100 TO 150	Over 150	0.1/10	
±0.15	±0.20	±0.30	±0.30	±0.50	±0.70	±1.00	±1.30	±2°	

HOW TO ORDER:
S24B-BM-1L.M

Locking lever — 1L: 1 levers(plastic) 2B: 2 bolts
2L: 2 levers(plastic) 4B: 4 bolts
1L.M: 1 levers(Metal)
2L.M: 2 levers(Metal)

Housing type — SE: Side entry
SEH: Side entry-high construction
TE: Top entry
TEH: Top entry-high construction
BM: Bulkhead mounted
SM: Sueface mounted
SMH: Sueface mounted-high construction
CC: Cable to cable
CCH: Cable to cable high construction

Sereies — S3A: 3A Compact type
S10A: 10A Compact type
S16A: 16A Compact type
S32A: 32A Compact type
S6B: 6B Standard type
S10B: 10B Standard type
S16B: 16B Standard type
S24B: S24B Standard type
S32B: S32B Standard type
S48B: S48B Standard type

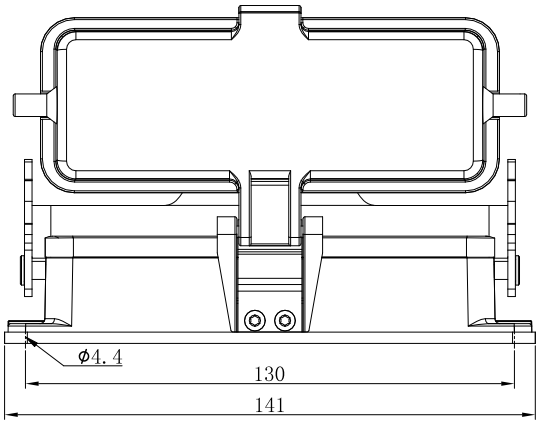

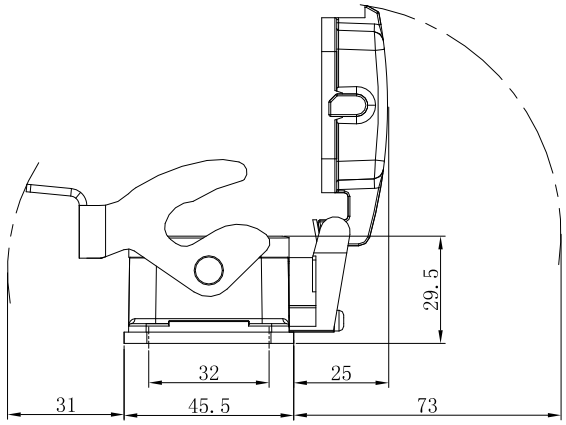

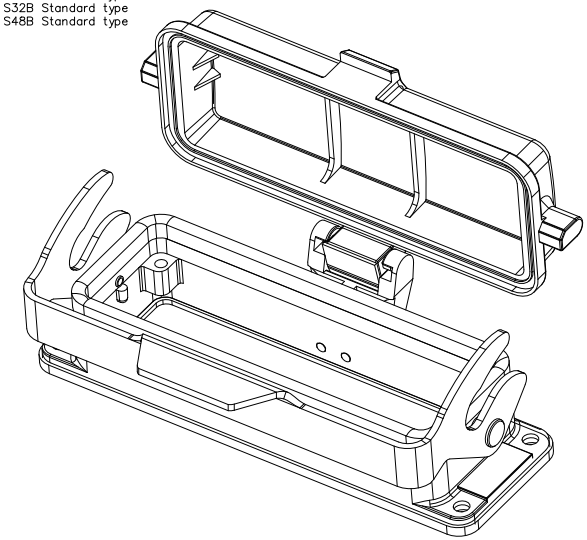

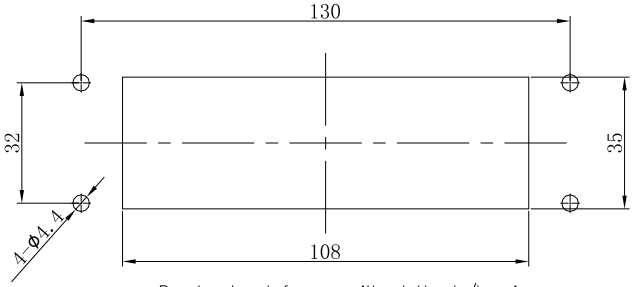

Panel cut out for use without Hoods/housings

订货号 Order No.	S24B-BM-1L.M-MC		名称 Name	S24B开孔安装金属单扣底座-金属盖子	未注公差 Tolerance	表面 Surface	
项目 Item	签字 Signature	日期 Date			Tolerances Table	VDI21	
设计 Design	CHH	2024.07.18	图号 Drawing No.	/	版本号 Revision Number	重量 Weight	比例 Scale
审核 Check	CHH	2024.07.18	材料 Material	/	M0	/	1:1
工艺 Process	-	-	物料号 Item No.	/	第1页/共1页 1 of 1	mm	
标准化 Unify	-	-		...	SUPU 宁波速普电子有限公司 NINGBO SUPU ELECTRONICS CO.,LTD.		
批准 Approve	XJ	2024.07.18		/			

借通用件登记 Common Part

原图号 Old Draw. No.

底图总号 Assembly No.