Transmittal, reproduction, dissemination and/or editing of this document as well as utilization of its contents and communication thereof to others without express authorization are prohibited.
未经允许禁止传输、复制、编辑该文档，以及利用其内容进行交流

REVISION RECORD				
REV	CN	DESCRIPTION	DRFT	DATE

General information:
1. Material: zinc die-cast
2. Colour: Grey
3. Surface: powder-coated
4. Operating temperature: -40°C~+125°C
5. Degree of protection acc.to DIN EN60529 for coupled connector: IP65
6. Outgoing direction: Bottom outlet
7. Locking element
   Lever type: single locking latch
   Material: stainless steel
8. Hoods&Housings seal: NBR
9. Undimensioned Tolerances:

Pitch Range In mm				Nominal Dimension Range In mm						
	Over 6 TO 10	Over 10 TO 24			Over 30 TO 60	Over 60 TO 100	Over 100 TO 150	Over 150	0.1/10	
TO 6				TO 30					∠	
±0.15	±0.20	±0.30	±0.30	±0.30	±0.50	±0.70	±1.00	±1.30	±2°	

HOW TO ORDER:

S3A-BM-1L.M

- Locking lever —
  - 1L: 1 levers(plastic)
  - 2L: 2 levers(plastic)
  - 1L.M: 1 levers(Metal)
  - 2L.M: 2 levers(Metal)
  - 2B: 2 bolts
  - 4B: 4 bolts
- Housing type —
  - SE: Side entry
  - SEH: Side entry-high construction
  - TE: Top entry
  - TEH: Top entry-high construction
  - BM: Bulkhead mounted
  - SM: Sueface mounted
  - SMH: Sueface mounted-high construction
  - CC: Cable to cable
  - CCH: Cable to cable high construction
- Sereies —
  - S3A: 3A Compact type
  - S10A: 10A Compact type
  - S16A: 16A Compact type
  - S32A: 32A Compact type
  - S6B: 6B Standard type
  - S10B: 10B Standard type
  - S16B: 16B Standard type
  - S24B: S24B Standard type
  - S32B: S32B Standard type
  - S48B: S48B Standard type

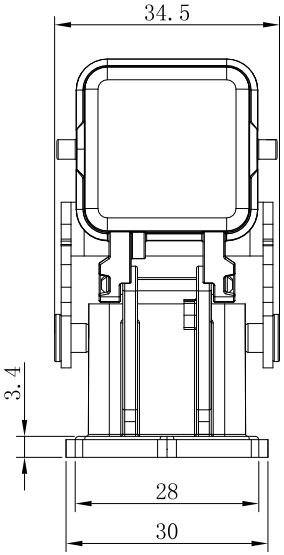

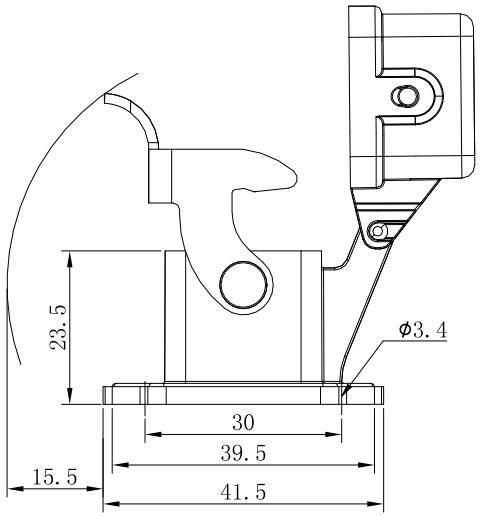

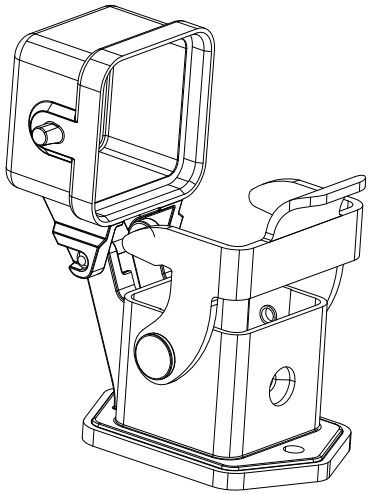

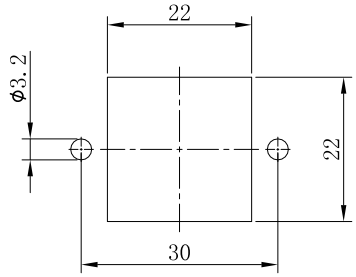

Panel cut out for use without Hoods/housings

订货号 Order No.	S3A-BM-1L. M-MC/M		名 称 Name	S3A开孔安装金属单扣底座-金属盖子(配公芯)	未注公差 Tolerance	表面 Surface	
项 目 Item	签 字 Signature	日 期 Date			Tolerances Table	VDI21	
设 计 Design	CHH	2024.07.08	图 号 Drawing No.	/	版本号 Revision Number	重量 Weight	比例 Scale
审 核 Check	CHH	2024.07.08	材 料 Material	/	M0	/	1:1
工 艺 Process	-	-	物料号 Item No.	/	第1页/共1页 1 of 1	mm	
标准化 Unify	-	-		...	SUPU 宁波速普电子有限公司 NINGBO SUPU ELECTRONICS CO.,LTD.		
批 准 Approve	XJ	2024.07.08		/			

借通用件登记 Common Part

原图号 Old Draw. No.

底图总号 Assembly No.