Transmittal, reproduction, dissemination and/or editing of this document as well as utilization of its contents and communication thereof to others without express authorization are prohibited.
未经允许禁止传输、复制、编辑该文档，以及利用其内容进行交流

REVISION RECORD				
REV	ECN	DESCRIPTION	DRFT	DATE

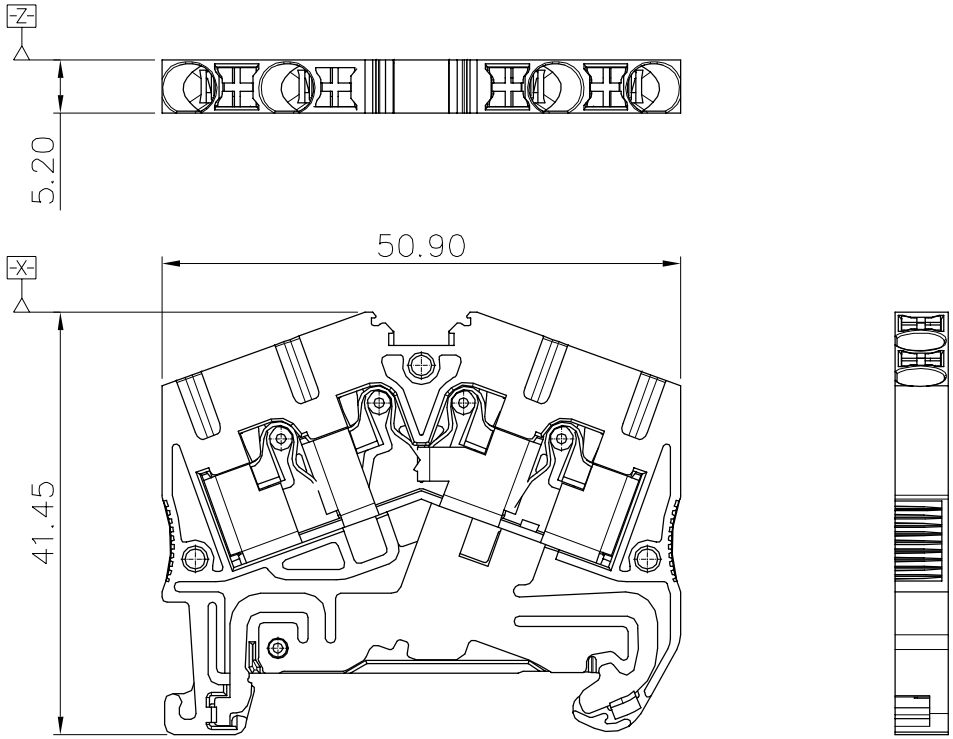

Connection method:
1. For Solid wire, peel wire in right length, push down the wire.
2. For flexible wire, peeling wire in right length, pushdown the key & fix the wire, or wire furruled and fix then.

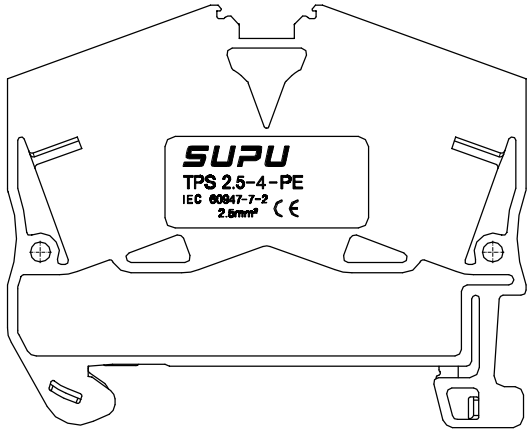

NOTES:
UL/CUL Standard
1.Conductor cross section : 26~12AWG

IEC Standard
1.Conductor cross section :

Wire range(Solid/Stranded)	0.2-2.5mm²
Solid	0.2-4mm²
Stranded	0.2-2.5mm²
Stranded with ferrules without plastic sleeve	0.2-2.5mm²
Stranded with ferrules with plastic sleeve	0.2-2.5mm²

2.Rated Voltage/Current :

Surge voltage category	Ⅲ
Pollution degree	3
Rated surge voltage(KV)	8

Material:

Insulator	PA66	UL94 V-0
Conductor	Copper alloy	Sn plated
Spring	Stainless steel	
Button	POM	
Ground pin	Copper alloy	Sn plated

General information:
1.Dimension shall be interpreted per ASME Y14.5-2009
2.Stripping length : 8-10mm
3.Operating temperature: -40°C~+105°C
4.RoHS Compliance
5.Undimensioned Tolerances:

Pitch Range In mm			Nominal Dimension Range In mm					— ⌒ ⌭
TO 6	Over 6 TO 10	Over 10 TO 24	TO 30	Over 30 TO 60	Over 60 TO 100	Over 100 TO 150	Over 150	0.1/10
								∠
±0.15	±0.20	±0.30	±0.30	±0.50	±0.70	±1.00	±1.30	±2°

HOW TO ORDER:
TPS2.5-4-PE
Sereies No.
Color: PE: Yellow Green

订货号 Order No.	TPS2.5-4-PE		名称 Name	TPS系列直插式弹簧斜面2.5mm²两进两出接地端子	未注公差 Tolerance		表面处理 Surfaace	
项目 Item	签字 Signature	日期 Date			见公差表		VDI21	
设计 Design	陈杰松	11/20/19"	图号 Drawing No.	/	阶段标记 Progress	版本 Revision	重量 Weight	比例 Scale
审核 Check	陈武	11/20/19"	材料 Material	见NOTES	M	0	/	1:1
工艺 Process	-	-	物料号 Item No.		第1页/共1页 1 of 1		mm	
标准化 Unify	-	-			SUPU 宁波速普电子有限公司 NINGBO SUPU ELECTRONICS CO., LTD.			
批准 Approve	梁文龙	11/20/19"						

借通用件登记 Common Part	
原图号 Old Draw. No.	
底图总号 Assembly No.	