Transmittal, reproduction, dissemination and/or editing of this document as well as utilization of its contents and communication thereof to others without express authorization are prohibited.
未经允许禁止传输、复制、编辑该文档，以及利用其内容进行交流

REVISION RECORD				
REV	ECN	DESCRIPTION	DRFT	DATE

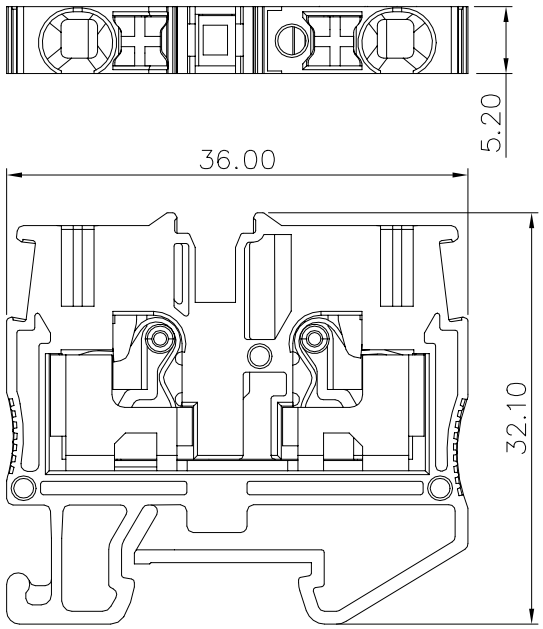

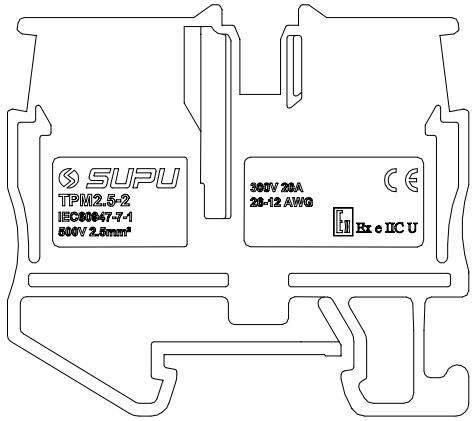

NOTES:

UL/CUL Standard

1.Conductor cross section : 26~12AWG

2.Rated Voltage/Current :

Use group	B	C	D
Rated voltage(V)	300	300	
Rated current(A)	20	20	

IEC Standard

1.Conductor cross section :

Wire range(Solid/Stranded)	0.2–2.5mm²
Solid	0.2–4mm²
Stranded	0.2–2.5mm²
Stranded with ferrules without plastic sleeve	0.2–2.5mm²
Stranded with ferrules with plastic sleeve	0.2–2.5mm²

2.Rated Voltage/Current :

Surge voltage category	Ⅲ
Pollution degree	3
Rated surge voltage(KV)	8
Rated voltage(V)	500
Rated current(A)	24

Material:

Insulator	PA66	UL94 V–0
Conductor	Copper alloy	Sn plated
Spring	Stainless steel	
Button	POM	UL94 V–0

General information:

1.Dimension shall be interpreted per ASME Y14.5–2009

2.Stripping length : 8–10mm

3.Operating temperature: –40°C~+105°C

4.RoHS Compliance

5.Undimensioned Tolerances:

Pitch Range In mm			Nominal Dimension Range In mm						– ⌒ ▱
TO 6	Over 6 TO 10	Over 10 TO 24	TO 30	Over 30 TO 60	Over 60 TO 100	Over 100 TO 150	Over 150		0.1/10
									∠
±0.15	±0.20	±0.30	±0.30	±0.50	±0.70	±1.00	±1.30		±2°

HOW TO ORDER:

TPM2.5–2–XX

Sereies No.

Color:
GY: Grey
BU: Blue
OG: Orange

订货号 Order No.	TPM2.5-2-XX		名称 Name	TP系列直插式弹簧 2.5mm² 一进一出微型接线端子	未注公差 Tolerance	表面 Surfaace	
项目 Item	签字 Signature	日期 Date			Tolerances Table	VDI21	
设计 Design	sww	07/23/22″	图号 Drawing No.	PRM003365	版本号 Revision Number	重量 Weight	比例 Scale
审核 Check	df	07/23/22″	材料 Material	Notes	M0	/	1:1
工艺 Process	-	-	物料号 Item No.	412201030	第1页/共1页 1 of 1		mm
标准化 Unify	-	-		412201032	SUPU 宁波速普电子有限公司		
批准 Approve	xj	07/23/22″		412201031	NINGBO SUPU ELECTRONICS CO., LTD.		

借通用件登记 Common Part	
原图号 Old Draw. No.	
底图总号 Assembly No.	