AP2012SURC HYPER RED

Features

- 2.0mmx1.2mm SMT LED,1.1mm THICKNESS.
- LOW POWER CONSUMPTION.
- WIDE VIEWING ANGLE.
- IDEAL FOR BACKLIGHT AND INDICATOR.
- VARIOUS COLORS AND LENS TYPES AVAILABLE.
- PACKAGE : 2000PCS / REEL.

Description

The Hyper Red source color devices are made with DH InGaAlP on GaAs substrate Light Emitting Diode.

Package Dimensions

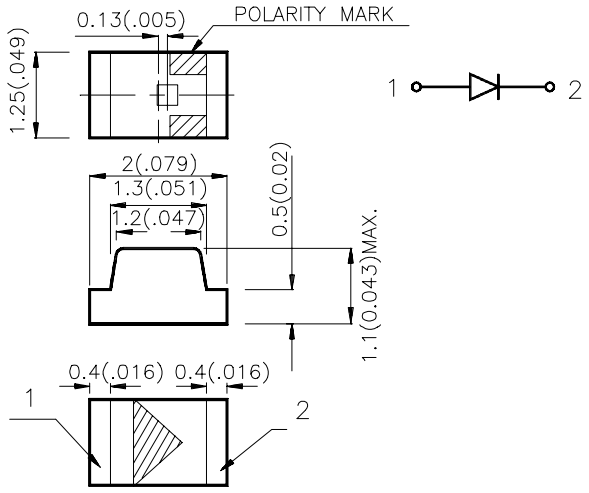

Notes:
1. All dimensions are in millimeters (inches).
2. Tolerance is ±0.1(0.004") unless otherwise noted.
3. Lead spacing is measured where the lead emerge package.
4. Specifications are subject to change without notice.

Selection Guide

Part No.	Dice	Lens Type	Iv (mcd) @ 20 mA		Viewing Angle
			Min.	Typ.	2θ1/2
AP2012SURC	HYPER RED (InGaAlP)	WATER CLEAR	70	150	120°

Note:
1. θ1/2 is the angle from optical centerline where the luminous intensity is 1/2 the optical centerline value.

Electrical / Optical Characteristics at T_A=25°C

Symbol	Parameter	Device	Typ.	Max.	Units	Test Conditions
λpeak	Peak Wavelength	Hyper Red	640		nm	IF=20mA
λ D	Dominate Wavelength	Hyper Red	628		nm	IF=20mA
Δλ1/2	Spectral Line Halfwidth	Hyper Red	27		nm	IF=20mA
C	Capacitance	Hyper Red	45		pF	VF=0V;f=1MHz
V_F	Forward Voltage	Hyper Red	1.9	2.5	V	IF=20mA
I_R	Reverse Current	Hyper Red		10	uA	VR = 5V

Absolute Maximum Ratings at T_A=25°C

Parameter	Hyper Red	Units
Power dissipation	170	mW
DC Forward Current	30	mA
Peak Forward Current [1]	185	mA
Reverse Voltage	5	V
Operating Temperature	-40°C To +85°C	
Storage Temperature	-40°C To +85°C	

Note:
1. 1/10 Duty Cycle, 0.1ms Pulse Width.

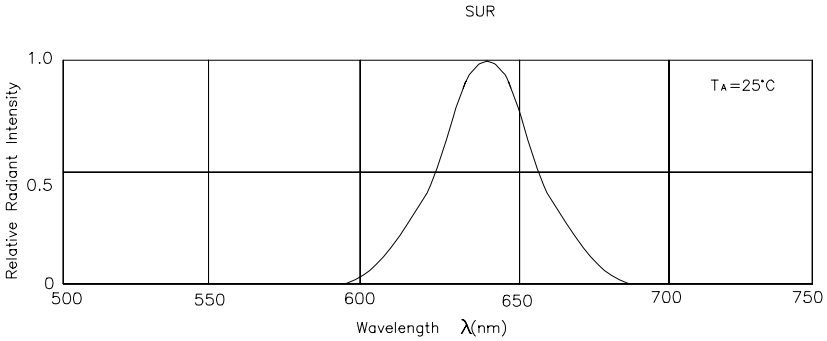

RELATIVE INTENSITY Vs. WAVELENGTH

Hyper Red AP2012SURC

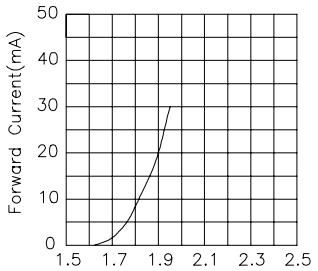

FORWARD CURRENT Vs
FORWARD VOLTAGE

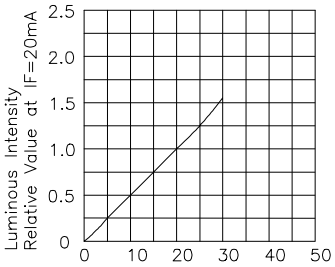

LUMINOUS INTENSITY Vs.
FORWARD CURRENT

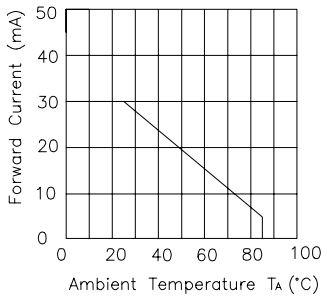

FORWARD CURRENT
DERATING CURVE

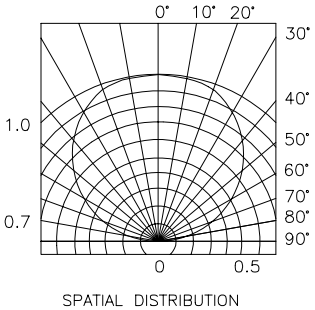

SPATIAL DISTRIBUTION

AP2012SURC
SMT Reflow Soldering Instructions

Number of reflow process shall be less than 2 times and cooling process to normal temperature is required between first and second soldering process.

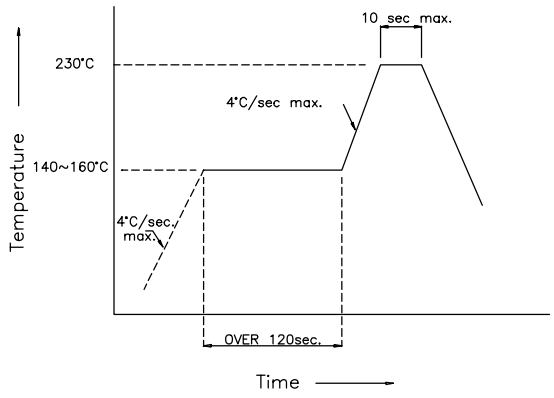

Recommended Soldering Pattern
(Units : mm)

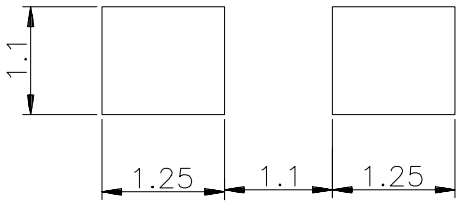
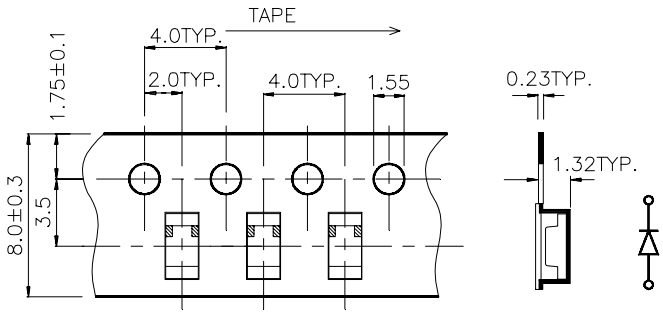
Tape Specifications
(Units : mm)