CLEAR LOGIC

CL8820A

Laser-Configured ASIC Family

Key Features

- Laser-Configured ASIC (LASIC®) technology offers the ultimate combination of performance, flexibility, and low cost
- Functionally, architecturally, and electrically compatible with industry-standard FLEX® 8000 series FPGAs
- High Density
  - 8,000 Usable gates
  - 820 Flip-flops
  - 152 Maximum user I/O pins
- Laser fuse technology provides very fast, dense interconnect routing
- Optional Instant-On configuration eliminates the need for an external configuration EPROM
- Fabricated using 0.5 micron CMOS process
- Very low current consumption (active and standby)
- Supports 3.3 volt or 5.0 volt I/O operation
- Alpha particle immune

CL8000 Product Family Overview

Parameter	CL8282A	CL8452A	CL8636A	CL8820A	CL81188A
Available Gates	5,000	8,000	12,000	16,000	24,000
Useable Gates	2,500	4,000	6,000	8,000	12,000
Flip-flops	282	452	636	820	1,188
Logic Elements	208	336	504	672	1,008
Max user I/O pins	78	120	136	152	184
Packages	84 pin PLCC 100 pin TQFP	84 pin PLCC 100 pin TQFP 160 pin PQFP	84 pin PLCC 160 pin PQFP 208 pin PQFP	144 pin TQFP 160 pin PQFP 208 pin PQFP	208 pin PQFP 240 pin PQFP

8K tbl 01

Description

The Clear Logic CL8000 Laser-Configured ASIC (LASIC®) family offers the ultimate combination of performance, flexibility, and cost. This family is a system level second source to Altera FLEX® 8000 products. For designs not requiring in-system reprogrammability, design verification can be performed using the programmable Altera devices, and Clear Logic LASICs can be used for low cost, high volume production.

Clear Logic's innovative laser ASIC technology eliminates NRE costs, test vector development, ordering minimums and long lead times. No re-simulation or re-layout is required, as the device is engineered using a cell-based, PLD-like architecture. Clear Logic's TestCell technology ensures complete test coverage through the use of specialized testing modes which are transparent to the user.

The Clear Logic CL8000 Laser-Configured ASIC family is based upon a large array of logic elements. Each logic element contains a configurable look up table for combinatorial functions and a register for sequential operations. A group of eight logic elements forms a block. Laser-configured metal fuses implement logical functions and control signal routing

Laser configuration provides reduced cost and enhanced performance. These inherent performance benefits include extremely consistent propagation delays, reduced power consumption, and improved immunity to noise and upset events.

Configuration

Clear Logic's CL8000 LASIC® family is compatible with all six configuration modes defined for the FLEX® 8000 product family. These configuration modes include the following:

- Active Serial
- Active Parallel Up
- Active Parallel Down
- Passive Parallel Synchronous
- Passive Parallel Asynchronous
- Passive Serial

The CL8000 is already configured when it is shipped, and can be configured to bypass the FLEX® 8000 configuration modes. This "Instant-On" configuration mode eliminates the need for external EPROMs or microcode. In the Instant-On mode, the CL8000 device begins Initialization immediately upon a low-to-high transition on the nCONFIG pin.

Additional Information

For further information on designing with the CL8000 LASIC family, please refer to the following documents:

- AN-01: Requesting a First Article. This document provides instructions on how to submit a bitstream file for generation of first articles.
- AN-02: Clear Logic Packaging Guide. This document provides specifications and drawings for packages used by the CL10K family and other Clear Logic devices.
- AN-03: CL8000 and System Configuration. This document contains a detailed discussion of all aspects of configuring CL8000-based systems.
- AN-04: CL8000 Technology White Paper. This document outlines the technologies employed by the CL8000 LASIC family.
- AN-05: Calculating CL8000 Power Consumption. This document provides guidelines for calculating power consumption based on CL8000 design characteristics.
- AN-06: Eliminating the Serial EPROM from FLEX 8000 Designs. This document outlines how additional savings can be achieve by removing the EPROM from the CL8000 LASIC family.
- AN-07: CL8000 Test Methodology. This document describes how Clear Logic provides 100% stuck-at fault coverage.
- AN-08: CL8000 LASIC Timing and Function Compatibility. This document shows how a seamless conversion from FPGA to ASIC can be achieve with no additional engineering can be achieved with Clear Logic.

Block Diagram

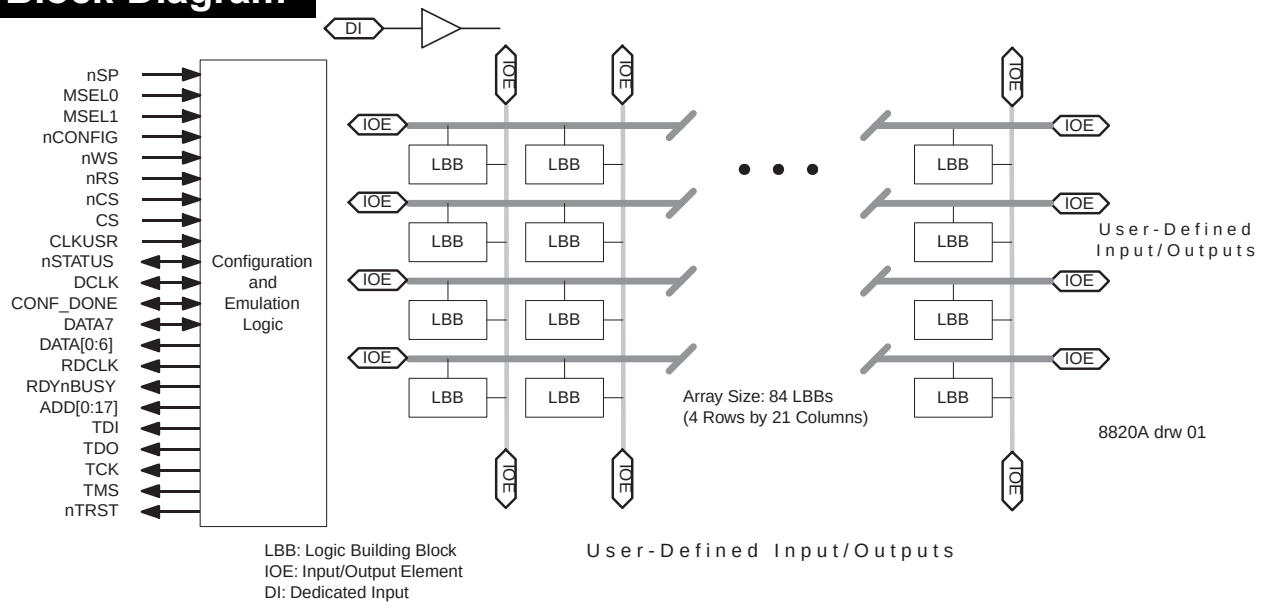

Pin Configuration

Pin Name	144 pin TQFP	160 pin PQFP	208 pin PQFP
nSP	110	1	207
MSEL0	109	2	4
MSEL1	72	44	49
nSTATUS	37	82	108
nCONFIG	38	81	103
DCLK	143	125	158
CONF_DONE	144	124	153
nWS	33	87	114
nRS	31	89	116
RDCLK	12	110	137
nCS	4	118	145
CS	3	121	148
RDYnBUSY	20	100	127
CLKUSR	13	107	134
ADD17	75	40	43
ADD16	76	39	42
ADD15	77	38	41
ADD14	78	37	40
ADD13	79	36	39
ADD12	83	32	35
ADD11	85	30	33
ADD10	87	28	31
ADD9	89	26	29
ADD8	92	22	25
ADD7	94	20	23
ADD6	95	18	21
ADD5	97	16	19
ADD4	102	11	14

8820A tbl 01A

Pin Configuration

Pin Name	144 pin TQFP	160 pin PQFP	208 pin PQFP
ADD3	103	10	13
ADD2	104	8	11
ADD1	105	7	10
ADD0	106	6	9
DATA7	131	140	178
DATA6	132	139	176
DATA5	133	138	174
DATA4	134	136	172
DATA3	135	135	171
DATA2	137	133	167
DATA1	138	132	165
DATA0	140	129	162
TDI	96	17	20
TDO	18	102	129
TCLK	88	27	30
TMS	86	29	32
nTRST	71	45	54
Dedicated Inputs	9, 26, 82, 99	14, 33, 94, 113	17, 36, 121, 140
VCCINT	8, 28, 70, 90, 111	3, 24, 46, 92, 114, 160	5, 6, 27, 48, 119, 141
VCCIO	16, 40, 60, 69, 91, 112, 122, 141	23, 47, 57, 69, 79, 104, 127, 137, 149, 159	26, 55, 69, 87, 102, 131, 159, 173, 191, 206
GND	7, 17, 27, 39, 54, 80, 81, 100, 101, 128, 142	12, 13, 34, 35, 51, 63, 75, 80, 83, 93, 103, 115, 126, 131, 143, 155	15, 16, 37, 38, 60, 78, 96, 109, 110, 120, 130, 142, 152, 164, 182, 200
NC (No Connect)	-	-	1, 2, 3, 50, 51, 52, 53, 104, 105, 106, 107, 154, 155, 156, 157, 208
Total user I/O pins	108	116	148

8820A tbl 01B

DC Electrical Specifications

Absolute Maximum Ratings

Symbol	Parameter	Conditions	Min	Max	Unit
V_{CC}	Supply voltage		-2.0	7.0	V
V_I	DC input voltage[1]		-2.0	7.0	V
I_{OUT}	DC output current, per pin		-25	25	mA
T_{STG}	Storage temperature	No bias	-65	150	°C
T_{AMB}	Ambient temperature	Under bias	-65	135	°C
T_J	Junction temperature	Under bias		135	°C

8K tbl 02

Recommended Operating Conditions [2]

Symbol	Parameter	Conditions	Min	Max	Unit
V_{CCINT}	Supply voltage, internal logic and input buffers				
	Commercial Grade Devices		4.75	5.25	V
	Industrial Grade Devices		4.50	5.50	V
V_{CCIO}	DC input voltage				
	5.0 volt commercial		4.75	5.25	V
	5.0 volt industrial		4.50	5.50	V
	3.3 volt operation		3.00	3.60	V
V_I	Input voltage		0	VCCINT	V
V_O	Output voltage		0	VCCIO	V
T_A	Operating temperature				
	Commercial temperature range		0	70	°C
	Industrial temperature range		-40	85	°C
t_R	Input signal rise time			40	ns
t_F	Input signal fall time			40	ns
t_{RVCC}	V_{CC} rise time			100	ms

8K tbl 03

DC Electrical Specifications cont.

DC Electrical Characteristics (over the operating range)

Symbol	Parameter	Conditions	Min	Typ[3]	Max	Unit
V_{IH}	Input HIGH Voltage		2.0		V_{CCINT} + 0.3	V
V_{IL}	Input LOW Voltage		-0.3		0.8	V
V_{OH}	Output HIGH Voltage	I_{OH} = -4.0 mA, VCCIO = VCCIO[Min]	2.4			V
V_{OL}	Output LOW Voltage	I_{OL} = 12.0 mA, VCCIO = VCCIO[Min]			0.45	V
I_{IN}	Input Leakage Current	V_I = VCC or GND	-10		10	µA
I_{OZ}	Output Leakage Current	V_O = VCC or GND	-40		40	µA
I_{CC0}	Standby Current	V_I = GND, no load		0.5	10	mA

8K tbl 04

Capacitance

Symbol	Parameter	Conditions	Min	Max	Unit
C_{IN}	Input Capacitance	V_{IN} = 0 V, f = 1.0 MHz		10	pF
C_{OUT}	Output Capacitance	V_{OUT} = 0 V, f = 1.0 MHz		10	pF

8K tbl 05

AC Electrical Specifications

I/O Element Timing Parameters [5]

Symbol	Parameter	Conditions	Speed: -2 Min	Speed: -2 Max	Speed: -3 Min	Speed: -3 Max	Speed: -4 Min	Speed: -4 Max	Unit
t_{IOD}	IOE register data delay			0.7		0.8		0.9	ns
t_{IOC}	IOE register control signal delay			1.7		1.8		1.9	ns
t_{IOE}	Output enable delay			1.7		1.8		1.9	ns
t_{IOCO}	IOE register clock to output delay			1.0		1.0		1.0	ns
t_{IOCOMB}	IOE combinatorial delay			0.3		0.2		0.1	ns
t_{IOSU}	IOE register setup time before clock		1.4		1.6		1.8		ns
t_{IOH}	IOE register hold time after clock		0.0		0.0		0.0		ns
t_{IOCLR}	IOE register clear delay			1.2		1.2		1.2	ns
t_{IN}	Input pad and buffer delay			1.5		1.6		1.7	ns
t_{OD1}	Output buffer and pad delay[6]	Slow Slew Rate = off, V_{CCIO} = 5.0v, C_L = 35 pF		1.1		1.4		1.7	ns
t_{OD2}	Output buffer and pad delay[6]	Slow Slew Rate = off, V_{CCIO} = 5.0v, C_L = 35 pF		1.6		1.9		2.2	ns
t_{OD3}	Output buffer and pad delay[6]	Slow Slew Rate = off, V_{CCIO} = 5.0v, C_L = 35 pF		4.6		4.9		5.2	ns
t_{ZX}	Output buffer disable delay[6]	C_L = 5 pF		1.4		1.6		1.8	ns
t_{ZX1}	Output buffer and pad delay[6]	Slow Slew Rate = off, V_{CCIO} = 5.0v, C_L = 35 pF		1.4		1.6		1.8	ns
t_{ZX2}	Output buffer and pad delay[6]	Slow Slew Rate = off, V_{CCIO} = 5.0v, C_L = 35 pF		1.6		2.1		2.3	ns
t_{ZX3}	Output buffer and pad delay[6]	Slow Slew Rate = off, V_{CCIO} = 5.0v, C_L = 35 pF		4.9		5.1		5.3	ns

8K tbl 06C

External Timing Parameters[4]

Symbol	Parameter	Conditions	Speed: -2 Min	Speed: -2 Max	Speed: -3 Min	Speed: -3 Max	Speed -4 Min	Speed -4 Max	Unit
t_{DRR}	Register to register delay via four LEs, three row interconnects, and four local interconnects			16		20		25	ns
t_{ODH}	Output data hold time after clock		1.0		1.0		1.0		ns

8K tbl 07B

AC Electrical Specifications cont.

Logic Element Timing Parameters[5]

Symbol	Parameter	Conditions	Speed: -2 Min	Speed: -2 Max	Speed: -3 Min	Speed: -3 Max	Speed: -4 Min	Speed: -4 Max	Unit
t_{LUT}	Look up table delay for data-in			2.0		2.5		3.2	ns
t_{CLUT}	Look up table delay for carry-in			0.0		0.0		0.0	ns
t_{RLUT}	Look up table delay for LE register feedback			0.9		1.1		1.5	ns
t_{GATE}	Cascade gate delay			0.0		0.0		0.0	ns
t_{CASC}	Cascade chain routing delay			0.6		0.7		0.9	ns
t_{CICO}	Carry-in to carry-out delay			0.4		0.5		0.6	ns
t_{CGEN}	Data-in to carry-out delay			0.4		0.5		0.7	ns
t_{CGENR}	LE register feedback to carry-out delay			0.9		1.1		1.5	ns
t_{C}	LE register control signal delay			1.6		2.0		2.5	ns
t_{CH}	Clock high time		1.7		1.7		2.7		ns
t_{CL}	Clock low time		1.7		1.7		2.7		ns
t_{CO}	LE register clock-to-output delay			0.4		0.5		0.6	ns
t_{COMB}	Combinatorial delay			0.4		0.5		0.6	ns
t_{SU}	LE register setup time before clock		0.8		1.1		1.2		ns
t_{H}	LE register hold time after clock		0.9		1.1		1.5		ns
t_{PRE}	LE register preset delay			0.6		0.7		0.8	ns
t_{CLR}	LE register clear delay			0.6		0.7		0.8	ns

8K tbl 08A

Interconnect Timing Parameters[5]

Symbol	Parameter	Conditions	Speed: -2 Min	Speed: -2 Max	Speed: -3 Min	Speed: -3 Max	Speed: -4 Min	Speed: -4 Max	Unit
$t_{LABCASC}$	Cascade delay between LEs in different LABs			0.3		0.4		0.4	ns
$t_{LABCARRY}$	Carry delay between LEs in different LABs			0.3		0.4		0.4	ns
t_{LOCAL}	LAB local interconnect delay			0.5		0.5		0.7	ns
t_{ROW}	Row interconnect routing delay			5.0		5.0		5.0	ns
t_{COL}	Column interconnect routing delay			3.0		3.0		3.0	ns
t_{DIN_C}	Dedicated input to LE control delay			5.0		5.0		5.5	ns
t_{DIN_D}	Dedicated input to LE data delay			7.0		7.0		7.5	ns
t_{DIN_IO}	Dedicated input to IOE control delay			5.0		5.0		5.5	ns

8K tbl 09B

AC Test Conditions

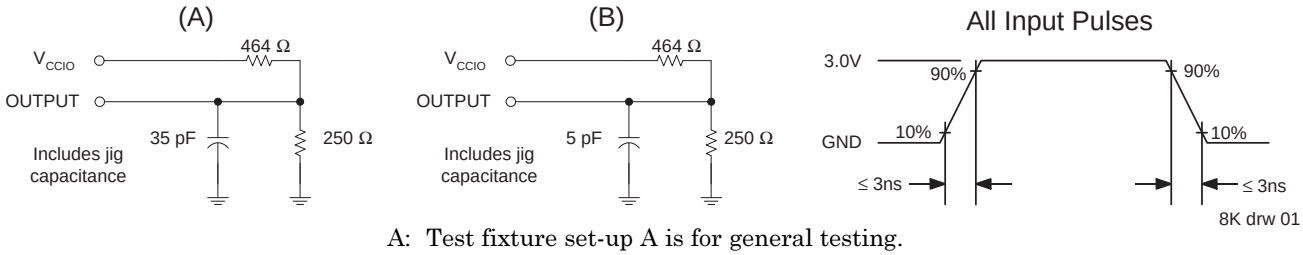

A: Test fixture set-up A is for general testing.
B: Test fixture set-up B is for high Z testing ($t_{ZX\#}$).

Notes to Tables

1. During transitions, inputs may undershoot to -2.0V for periods shorter than 20ns. Otherwise, minimum DC input voltage is -0.3V.

2. The following devices do not have V_{CCIO} pins: CL8282A, CL8452A. For these devices, all references to V_{CCIO} should be changed to V_{CCINT}

3. Typical values are at V_{CC} of 5.0 volts and ambient temperature of 25 °C.

4. Guaranteed but not tested. Characterized initially, and after any design changes which may affect these parameters.

5. Internal timing delays are based on characterization, and cannot be explicitly tested. Internal timing parameters should be used for performance estimation only.

6. Use AC Test Conditions set-up B for these parameters.

Revision History

16 Jan. 1998:	Created new document
31 Jul. 1999:	Recompiled databook, 8820 package update.
29 Nov. 1999:	Remove reference to the 8282AV device which is not supported.
01 Dec. 2000:	Review and reprint.

Ordering Information

Part Number	Temperature Range	Package Type	Speed	Altera Equivalent
CL8820ATC144-4	Commercial	144-pin TQFP	-4 (slowest)	EPF8820ATC144-4
CL8820ATC144-3			-3	EPF8820ATC144-3
CL8820ATC144-2			-2 (fastest)	EPF8820ATC144-2
CL8820AQC160-4		160-pin Plastic QFP	-4 (slowest)	EPF8820AQC160-4
CL8820AQC160-3			-3	EPF8820AQC160-3
CL8820AQC160-2			-2 (fastest)	EPF8820AQC160-2
CL8820AQC208-4		208-pin Plastic QFP	-4 (slowest)	EPF8820AQC208-4
CL8820AQC208-3			-3	EPF8820AQC208-3
CL8820AQC208-2			-2 (fastest)	EPF8820AQC208-2
CL8820AQI208-4	Industrial	208-pin Plastic QFP	-4 (slowest)	EPF8820ARI208-4

8820A tbl 02