2-Megabit (256K x 8) 5-volt Only CMOS Flash Memory

AT49F020

Features

- **Single Voltage Operation**
  - **5V Read**
  - **5V Reprogramming**
- **Fast Read Access Time - 55 ns**
- **Internal Program Control and Timer**
- **8K bytes Boot Block With Lockout**
- **Fast Erase Cycle Time - 10 seconds**
- **Byte By Byte Programming - 50 µs/Byte**
- **Hardware Data Protection**
- **$\overline{\text{DATA}}$ Polling For End Of Program Detection**
- **Low Power Dissipation**
  - **50 mA Active Current**
  - **100 µA CMOS Standby Current**
- **Typical 10,000 Write Cycles**

Description

The AT49F020 is a 5-volt-only in-system Flash Memory. Its 2 megabits of memory is organized as 262,144 words by 8 bits. Manufactured with Atmel's advanced nonvolatile CMOS technology, the device offers access times to 55 ns with power dissipation of just 275 mW over the commercial temperature range. When the device is deselected, the CMOS standby current is less than 100 µA.

To allow for simple in-system reprogrammability, the AT49F020 does not require high input voltages for programming. Five-volt-only commands determine the read and programming operation of the device. Reading data out of the device is similar to reading from an EPROM. Reprogramming the AT49F020 is performed by erasing the entire 2 megabits of memory and then programming on a byte by byte basis. The byte programming time is a fast 50 µs. The end of a program cycle can be optionally detected by the $\overline{\text{DATA}}$ polling feature. Once the end of a byte program cycle has been detected, a new access for a read or program can begin. The typical number of program and erase cycles is in excess of 10,000 cycles.

(continued)

Pin Configurations

Pin Name	Function
A0 - A17	Addresses
$\overline{\text{CE}}$	Chip Enable
$\overline{\text{OE}}$	Output Enable
$\overline{\text{WE}}$	Write Enable
I/O0 - I/O7	Data Inputs/Outputs
NC	No Connect

DIP Top View

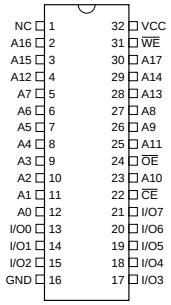

PLCC Top View

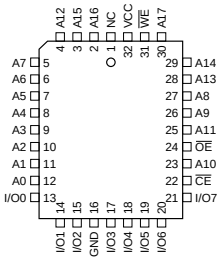

TSOP Top View
Type 1

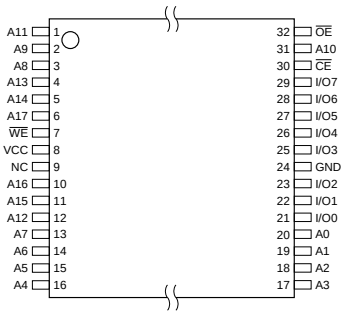

0567B-A–8/97

The optional 8K bytes boot block section includes a reprogramming write lock out feature to provide data integrity. The boot sector is designed to contain user secure code, and when the feature is enabled, the boot sector is permanently protected from being reprogrammed.

Block Diagram

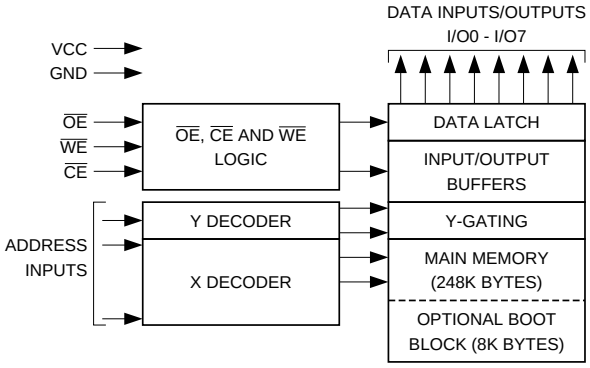

Device Operation

READ: The AT49F020 is accessed like an EPROM. When $\overline{CE}$ and $\overline{OE}$ are low and $\overline{WE}$ is high, the data stored at the memory location determined by the address pins is asserted on the outputs. The outputs are put in the high impedance state whenever $\overline{CE}$ or $\overline{OE}$ is high. This dual-line control gives designers flexibility in preventing bus contention.

ERASURE: Before a byte can be reprogrammed, the 256K bytes memory array (or 248K bytes if the boot block featured is used) must be erased. The erased state of the memory bits is a logical “1”. The entire device can be erased at one time by using a 6-byte software code. The software chip erase code consists of 6-byte load commands to specific address locations with a specific data pattern (please refer to the Chip Erase Cycle Waveforms).

After the software chip erase has been initiated, the device will internally time the erase operation so that no external clocks are required. The maximum time needed to erase the whole chip is t_{EC}. If the boot block lockout feature has been enabled, the data in the boot sector will not be erased.

BYTE PROGRAMMING: Once the memory array is erased, the device is programmed (to a logical “0”) on a byte-by-byte basis. Please note that a data “0” cannot be programmed back to a “1”; only erase operations can convert “0”s to “1”s. Programming is accomplished via the internal device command register and is a 4 bus cycle operation (please refer to the Command Definitions table). The device will automatically generate the required internal program pulses.

The program cycle has addresses latched on the falling edge of $\overline{WE}$ or $\overline{CE}$, whichever occurs last, and the data latched on the rising edge of $\overline{WE}$ or $\overline{CE}$, whichever occurs first. Programming is completed after the specified t_{BP} cycle time. The $\overline{DATA}$ polling feature may also be used to indicate the end of a program cycle.

BOOT BLOCK PROGRAMMING LOCKOUT: The device has one designated block that has a programming lockout feature. This feature prevents programming of data in the designated block once the feature has been enabled. The size of the block is 8K bytes. This block, referred to as the boot block, can contain secure code that is used to bring up the system. Enabling the lockout feature will allow the boot code to stay in the device while data in the rest of the device is updated. This feature does not have to be activated; the boot block's usage as a write protected region is optional to the user. The address range of the boot block is 00000H to 01FFFH.

Once the feature is enabled, the data in the boot block can no longer be erased or programmed. Data in the main memory block can still be changed through the regular programming method. To activate the lockout feature, a series of six program commands to specific addresses with specific data must be performed. Please refer to the Command Definitions table.

BOOT BLOCK LOCKOUT DETECTION: A software method is available to determine if programming of the boot block section is locked out. When the device is in the software product identification mode (see Software Product Identification Entry and Exit sections) a read from address location 00002H will show if programming the boot block is locked out. If the data on I/O0 is low, the boot block can be programmed; if the data on I/O0 is high, the program lockout feature has been activated and the block cannot be programmed. The software product identification code should be used to return to standard operation.

PRODUCT IDENTIFICATION: The product identification mode identifies the device and manufacturer as Atmel. It may be accessed by hardware or software operation. The hardware operation mode can be used by an external programmer to identify the correct programming algorithm for the Atmel product.

For details, see Operating Modes (for hardware operation) or Software Product Identification. The manufacturer and device code is the same for both modes.

DATA POLLING: The AT49F020 features $\overline{\text{DATA}}$ polling to indicate the end of a program cycle. During a program cycle an attempted read of the last byte loaded will result in the complement of the loaded data on I/O7. Once the program cycle has been completed, true data is valid on all outputs and the next cycle may begin. $\overline{\text{DATA}}$ polling may begin at any time during the program cycle.

TOGGLE BIT: In addition to $\overline{\text{DATA}}$ polling the AT49F020 provides another method for determining the end of a program or erase cycle. During a program or erase operation, successive attempts to read data from the device will result in I/O6 toggling between one and zero. Once the program cycle has completed, I/O6 will stop toggling and valid data will be read. Examining the toggle bit may begin at any time during a program cycle.

HARDWARE DATA PROTECTION: Hardware features protect against inadvertent programs to the AT49F020 in the following ways: (a) V_{CC} sense: if V_{CC} is below 3.8V (typical), the program function is inhibited. (b) Program inhibit: holding any one of $\overline{\text{OE}}$ low, $\overline{\text{CE}}$ high or $\overline{\text{WE}}$ high inhibits program cycles. (c) Noise filter: pulses of less than 15 ns (typical) on the $\overline{\text{WE}}$ or $\overline{\text{CE}}$ inputs will not initiate a program cycle.

Command Definition (in Hex)

Command Sequence	Bus Cycles	1st Bus Cycle		2nd Bus Cycle		3rd Bus Cycle		4th Bus Cycle		5th Bus Cycle		6th Bus Cycle	
		Addr	Data	Addr	Data	Addr	Data	Addr	Data	Addr	Data	Addr	Data
Read	1	Addr	D_{OUT}										
Chip Erase	6	5555	AA	2AAA	55	5555	80	5555	AA	2AAA	55	5555	10
Byte Program	4	5555	AA	2AAA	55	5555	A0	Addr	D_{IN}				
Boot Block Lockout (1)	6	5555	AA	2AAA	55	5555	80	5555	AA	2AAA	55	5555	40
Product ID Entry	3	5555	AA	2AAA	55	5555	90						
Product ID Exit (2)	3	5555	AA	2AAA	55	5555	F0						
Product ID Exit (2)	1	XXXX	F0										

Notes: 1. The 8K byte boot sector has the address range 00000H to 01FFFH.
2. Either one of the Product ID exit commands can be used.

Absolute Maximum Ratings*

Temperature Under Bias ..... -55°C to +125°C

Storage Temperature ..... -65°C to +150°C

All Input Voltages (including NC Pins)
with Respect to Ground .....-0.6V to +6.25V

All Output Voltages
with Respect to Ground .....-0.6V to V_{CC} + 0.6V

Voltage on $\overline{\text{OE}}$
with Respect to Ground .....-0.6V to +13.5V

*NOTICE: Stresses beyond those listed under “Absolute Maximum Ratings” may cause permanent damage to the device. This is a stress rating only and functional operation of the device at these or any other conditions beyond those indicated in the operational sections of this specification is not implied. Exposure to absolute maximum rating conditions for extended periods may affect device reliability.

DC and AC Operating Range

		AT49F020-55	AT49F020-70	AT49F020-90
Operating Temperature (Case)	Com.	0°C - 70°C	0°C - 70°C	0°C - 70°C
	Ind.	-40°C - 85°C	-40°C - 85°C	-40°C - 85°C
V_{CC} Power Supply		5V ± 10%	5V ± 10%	5V ± 10%

Operating Modes

Mode	$\overline{CE}$	$\overline{OE}$	$\overline{WE}$	Ai	I/O
Read	V_{IL}	V_{IL}	V_{IH}	Ai	D_{OUT}
Program(2)	V_{IL}	V_{IH}	V_{IL}	Ai	D_{IN}
Standby/Write Inhibit	V_{IH}	X(1)	X	X	High Z
Program Inhibit	X	X	V_{IH}		
Program Inhibit	X	V_{IL}	X		
Output Disable	X	V_{IH}	X		High Z
Product Identification					
Hardware	V_{IL}	V_{IL}	V_{IH}	A1 - A17 = V_{IL}, A9 = V_H,(3) A0 = V_{IL}	Manufacturer Code(4)
				A1 - A17 = V_{IL}, A9 = V_H,(3) A0 = V_{IH}	Device Code(4)
Software(5)				A0 = V_{IL}, A1 - A17=V_{IL}	Manufacturer Code(4)
				A0 = V_{IH}, A1 - A17=V_{IL}	Device Code(4)

Notes:
1. X can be V_{IL} or V_{IH}.
2. Refer to AC Programming Waveforms.
3. V_H = 12.0V ± 0.5V.
4. Manufacturer Code: 1FH, Device Code 0BH.
5. See details under Software Product Identification Entry/Exit.

DC Characteristics

Symbol	Parameter	Condition		Min	Max	Units
I_{LI}	Input Load Current	V_{IN} = 0V to V_{CC}			10	µA
I_{LO}	Output Leakage Current	$V_{I/O}$ = 0V to V_{CC}			10	µA
I_{SB1}	V_{CC} Standby Current CMOS	$\overline{CE}$ = V_{CC} - 0.3V to V_{CC}	Com.		100	µA
			Ind.		300	µA
I_{SB2}	V_{CC} Standby Current TTL	$\overline{CE}$ = 2.0V to V_{CC}			3	mA
I_{CC} (1)	V_{CC} Active Current	f = 5 MHz; I_{OUT} = 0 mA			50	mA
V_{IL}	Input Low Voltage				0.8	V
V_{IH}	Input High Voltage			2.0		V
V_{OL}	Output Low Voltage	I_{OL} = 2.1 mA			.45	V
V_{OH1}	Output High Voltage	I_{OH} = -400 µA		2.4		V
V_{OH2}	Output High Voltage CMOS	I_{OH} = -100 µA; V_{CC} = 4.5V		4.2		V

Note: In the erase mode, I_{CC} is 90 mA.

AC Read Characteristics

Symbol	Parameter	AT49F020-55		AT49F020-70		AT49F020-90		Units
		Min	Max	Min	Max	Min	Max	
t_{ACC}	Address to Output Delay		55		70		90	ns
t_{CE}(1)	$\overline{CE}$ to Output Delay		55		70		90	ns
t_{OE}(2)	$\overline{OE}$ to Output Delay	0	30	0	35	0	40	ns
t_{DF}(3)(4)	$\overline{CE}$ or $\overline{OE}$ to Output Float	0	25	0	25	0	25	ns
t_{OH}	Output Hold from $\overline{OE}$, $\overline{CE}$ or Address, whichever occurred first	0		0		0		ns

AC Read Waveforms(1)(2)(3)(4)

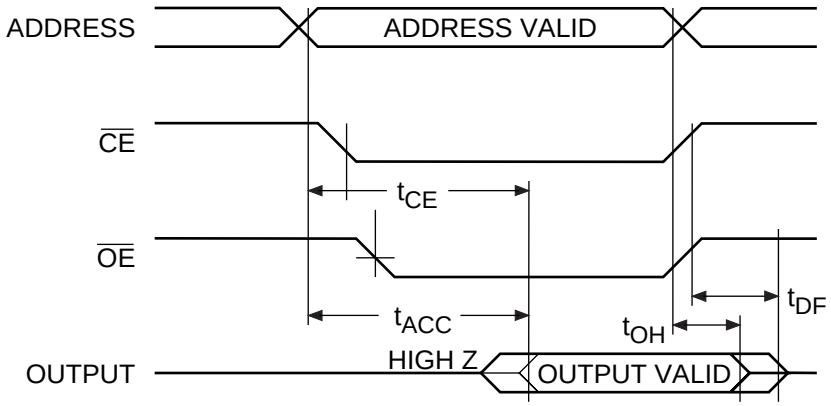

Notes: 1. $\overline{CE}$ may be delayed up to t_{ACC} - t_{CE} after the address transition without impact on t_{ACC}.
2. $\overline{OE}$ may be delayed up to t_{CE} - t_{OE} after the falling edge of $\overline{CE}$ without impact on t_{CE} or by t_{ACC} - t_{OE} after an address change without impact on t_{ACC}.
3. t_{DF} is specified from $\overline{OE}$ or $\overline{CE}$ whichever occurs first (C_L = 5 pF).
4. This parameter is characterized and is not 100% tested.

Input Test Waveforms and Measurement Level

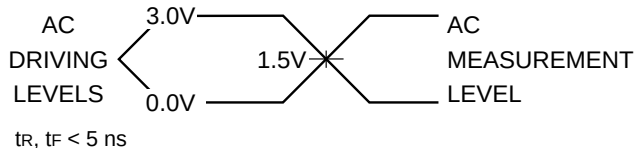

Output Test Load

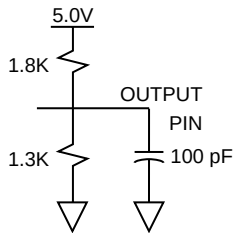

Pin Capacitance(1)

(f = 1 MHz, T = 25°C)

	Typ	Max	Units	Conditions
C_{IN}	4	6	pF	V_{IN} = 0V
C_{OUT}	8	12	pF	V_{OUT} = 0V

Note: 1. This parameter is characterized and is not 100% tested.

AC Byte Load Characteristics

Symbol	Parameter	Min	Max	Units
t_{AS}, t_{OES}	Address, $\overline{OE}$ Set-up Time	0		ns
t_{AH}	Address Hold Time	50		ns
t_{CS}	Chip Select Set-up Time	0		ns
t_{CH}	Chip Select Hold Time	0		ns
t_{WP}	Write Pulse Width ($\overline{WE}$ or $\overline{CE}$)	90		ns
t_{DS}	Data Set-up Time	50		ns
t_{DH}, t_{OEH}	Data, $\overline{OE}$ Hold Time	0		ns
t_{WPH}	Write Pulse Width High	90		ns

AC Byte Load Waveforms

$\overline{WE}$ Controlled

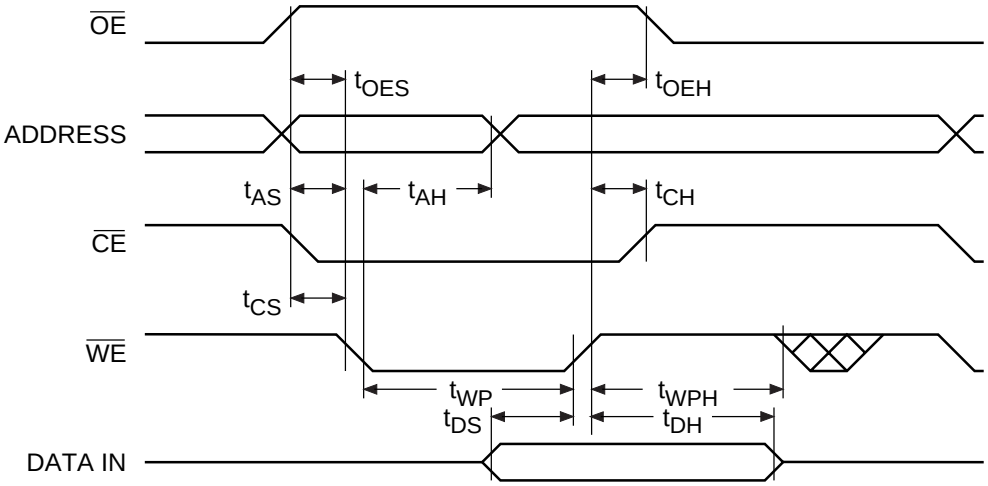

$\overline{CE}$ Controlled

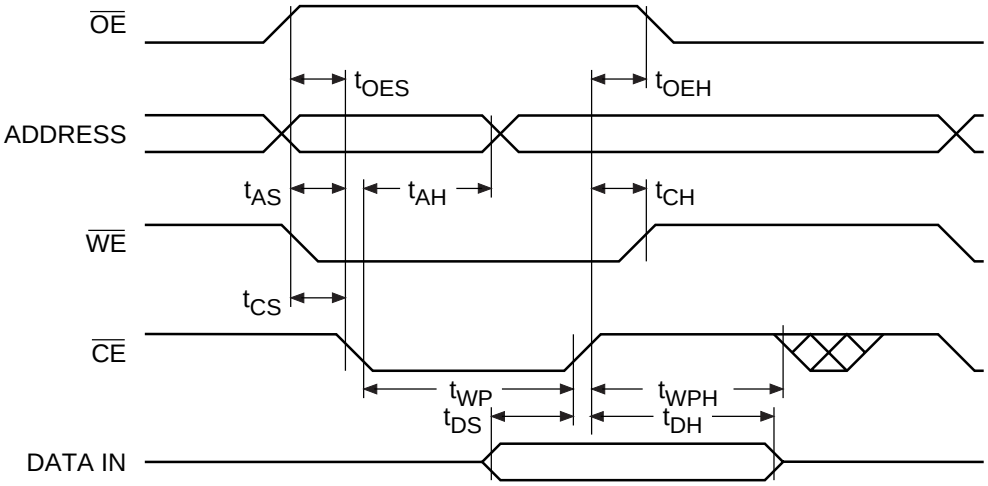

Program Cycle Characteristics

Symbol	Parameter	Min	Typ	Max	Units
t_{BP}	Byte Programming Time		10	50	µs
t_{AS}	Address Set-up Time	0			ns
t_{AH}	Address Hold Time	50			ns
t_{DS}	Data Set-up Time	50			ns
t_{DH}	Data Hold Time	0			ns
t_{WP}	Write Pulse Width	90			ns
t_{WPH}	Write Pulse Width High	90			ns
t_{EC}	Erase Cycle Time			10	seconds

Program Cycle Waveforms

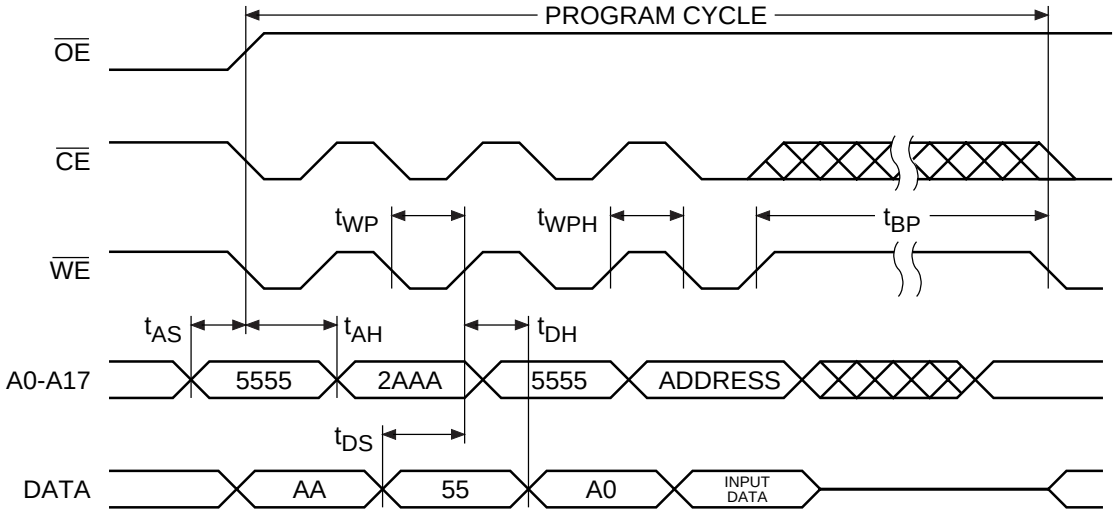

Chip Erase Cycle Waveforms

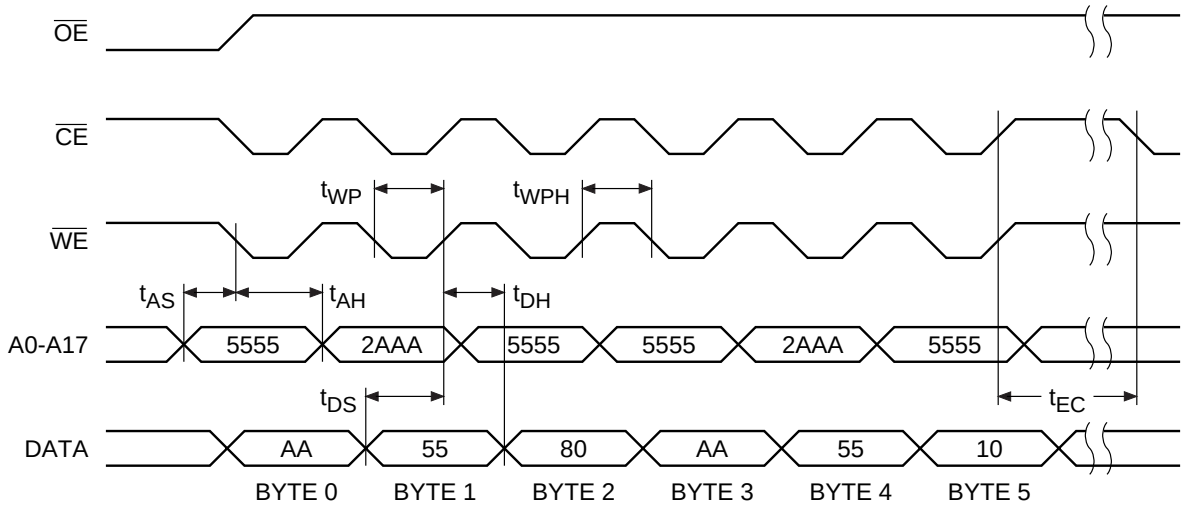

Note: $\overline{OE}$ must be high only when $\overline{WE}$ and $\overline{CE}$ are both low.

$\overline{\text{Data}}$ Polling Characteristics (1)

Symbol	Parameter	Min	Typ	Max	Units
t_{DH}	Data Hold Time	10			ns
t_{OEH}	$\overline{OE}$ Hold Time	10			ns
t_{OE}	$\overline{OE}$ to Output Delay (2)				ns
t_{WR}	Write Recovery Time	0			ns

Notes: 1. These parameters are characterized and not 100% tested.
2. See t_{OE} spec in AC Read Characteristics

$\overline{\text{Data}}$ Polling Waveforms

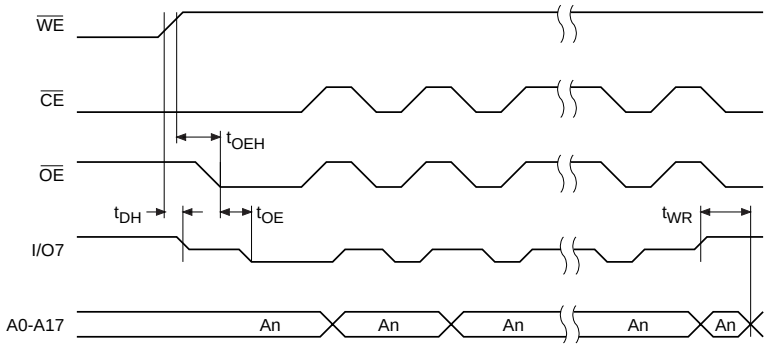

Toggle Bit Characteristics(1)

Symbol	Parameter	Min	Typ	Max	Units
t_{DH}	Data Hold Time	10			ns
t_{OEH}	$\overline{OE}$ Hold Time	10			ns
t_{OE}	$\overline{OE}$ to Output Delay(2)				ns
t_{OEHP}	$\overline{OE}$ High Pulse	150			ns
t_{WR}	Write Recovery Time	0			ns

Notes: 1. These parameters are characterized and not 100% tested.
2. See t_{OE} spec in AC Read Characteristics.

Toggle Bit Waveforms(1)(2)(3)

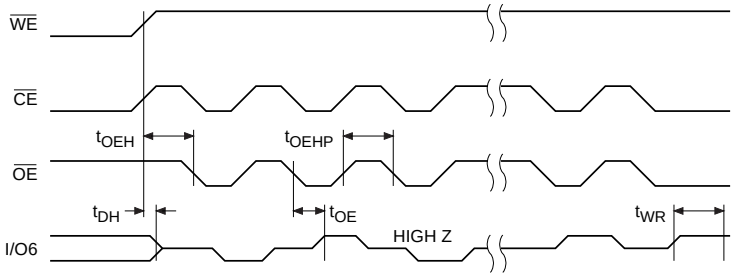

Notes: 1. Toggling either $\overline{OE}$ or $\overline{CE}$ or both $\overline{OE}$ and $\overline{CE}$ will operate toggle bit. The t_{OEHP} specification must be met by the toggling input(s).
2. Beginning and ending state of I/O6 will vary.
3. Any address location may be used but the address should not vary.

Software Product Identification Entry[1]

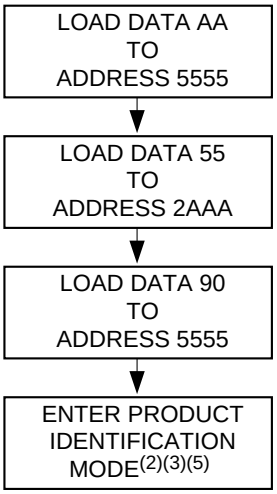

Software Product Identification Exit[1]

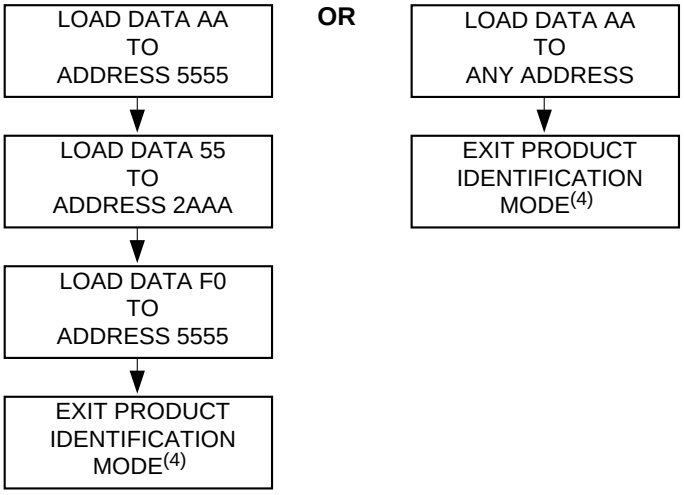

Notes:
1. Data Format: I/O7 - I/O0 (Hex);
   Address Format: A14 - A0 (Hex).
2. A1 - A17 = V_{IL}.
   Manufacture Code is read for A0 = V_{IL};
   Device Code is read for A0 = V_{IH}.
3. The device does not remain in identification mode if powered down.
4. The device returns to standard operation mode.
5. Manufacturers Code: 1FH
   Device Code: 0BH.

Boot Block Lockout Feature Enable Algorithm[1]

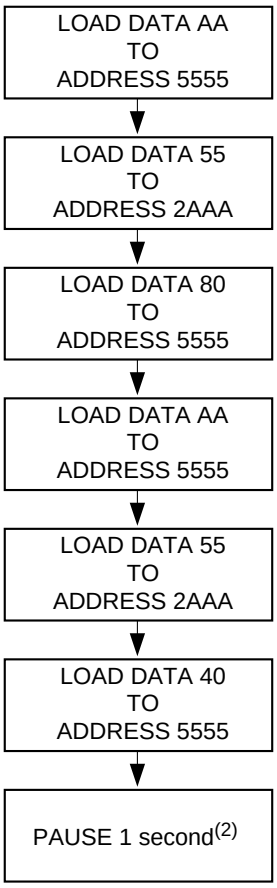

Notes:
1. Data Format: I/O7 - I/O0 (Hex);
   Address Format: A14 - A0 (Hex).
2. Boot block lockout feature enabled.

Ordering Information (1)

t_{ACC} (ns)	I_{CC} (mA) Active	I_{CC} (mA) Standby	Ordering Code	Package	Operation Range
55	50	0.1	AT49F020-55JC AT49F020-55PC AT49F020-55TC	32J 32P6 32T	Commercial (0° to 70°C)
	50	0.3	AT49F020-55JI AT49F020-55PI AT49F020-55TI	32J 32P6 32T	Industrial (-40° to 85°C)
70	50	0.1	AT49F020-70JC AT49F020-70PC AT49F020-70TC	32J 32P6 32T	Commercial (0° to 70°C)
	50	0.3	AT49F020-70JI AT49F020-70PI AT49F020-70TI	32J 32P6 32T	Industrial (-40° to 85°C)
90	50	0.1	AT49F020-90JC AT49F020-90PC AT49F020-90TC	32J 32P6 32T	Commercial (0° to 70°C)
	50	0.3	AT49F020-90JI AT49F020-90PI AT49F020-90TI	32J 32P6 32T	Industrial (-40° to 85°C)

Note: The AT49F020 has as optional boot block feature. The part number shown in the Ordering Information table is for devices with the boot block in the lower address range (i.e., 00000H to 01FFFH). Users requiring the boot block to be in the higher address range should contact Atmel.

Package Type	
32J	32 Lead, Plastic, J-Leaded Chip Carrier Package (PLCC)
32P6	32 Lead, 0.600" Wide, Plastic Dual Inline Package (PDIP)
32T	32 Lead, Thin Small Outline Package (TSOP)