Analog Technology, Inc.

AP1505

Single-end Voltage Mode PWM Controller

■ Features

- Complete PWM Power Control Circuitry
- Single-end Output
- A Stable 5V± 3% Reference output
- Soft Start Function
- Adjustable Oscillator Frequency

■ Connection Diagram

(TOP VIEW)

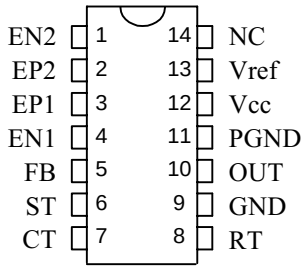

■ Description

The AP1505 incorporates on a single monolithic chip all the functions required in the construction of a pulse-width-modulation (PWM) control circuit. Designed primarily for power supply control, this device offers the systems engineer the flexibility to tailor the power supply control circuitry to a specific application.

The AP1505 contains two error amplifiers, an on-chip adjustable oscillator, a dead-time comparator, a 5V±3% precision regulator and a single-end output transistor.

The error amplifiers exhibit a common-mode voltage range from –0.3V to V_{CC} –2V. The on-chip oscillator may be bypassed by terminating RT to the reference output and providing a sawtooth input to CT, or it may drive the common circuits in synchronous multiple-rail power supplies.

The uncommitted output transistors provide either common-emitter or emitter-follower output capability. The AP1505 provides for single-ended output operation and is characterized for operation from 0°C to 70°C.

■ Ordering Information

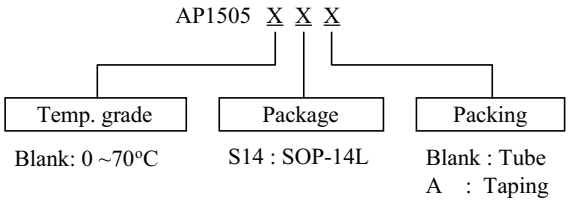

■ Functional Block Diagram

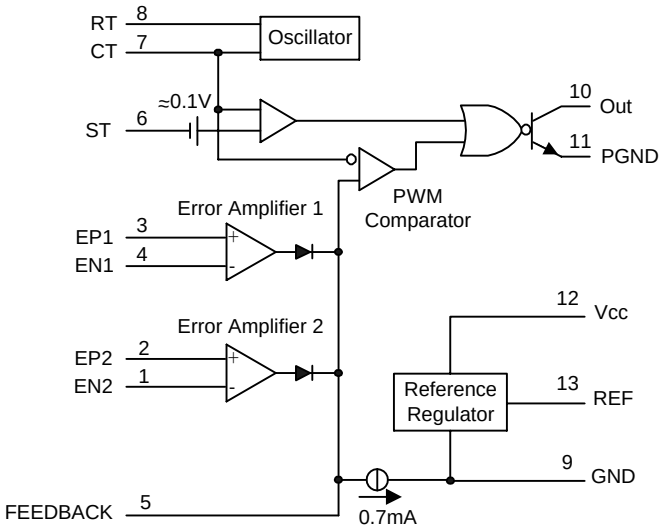

This datasheet contains new product information. Analog Technology reserves the rights to modify the product specification without notice. No liability is assumed as a result of the use of this product. No rights under any patent accompany the sale of the product.

Rev.A0 Feb.22, 2002

■ Absolute Maximum Ratings

Rating	Symbol	AP1505	Unit
Power Supply Voltage	V_{CC}	40	V
Collector Output Voltage	V_{C1}	40	V
Collector Output Current	I_{C1}	500	mA
Amplifier Input Voltage Range	V_{IR}	-0.3 to +40	V
Power Dissipation @ $T_A \leqq 45^oC$	P_D	1000	mW
Thermal Resistance, Junction-to-Ambient	$R_{\Theta JA}$	80	$^oC/W$
Operating Junction Temperature	T_J	125	^oC
Storage Temperature Range	Tstg	-55 to +125	^oC
Operating Ambient Temperature Range	T_A	0 to +70	^oC
Derating Ambient Temperature	T_A	45	^oC

■ Recommended Operating Conditions

Characteristics	Symbol	Min	Typ	Max	Unit
Power Supply Voltage	V_{CC}	7.0	15	40	V
Collector Output Voltage	V_{C1}	-	30	40	V
Collector Output Current	I_{C1}	-	-	200	mA
Amplified Input Voltage	V_{in}	-0.3	-	V_{CC}-2.0	V
Current Into Feedback Terminal	I_{fb}	-	-	0.3	mA
Reference Output Current	I_{ref}	-	-	10	mA
Timing Resistor	R_T	1.8	30	500	kΩ
Timing Capacitor	C_T	0.0047	0.001	10	μF
Oscillator Frequency	f_{OSC}	1.0	40	200	kHz

■ Electrical Characteristics (V_{CC}=15V, C_T=0.01μF, R_T=12 KΩ, unless otherwise noted.)

For typical values T_A=25°C, for min/max values T_A is the operating ambient temperature range that applies, unless otherwise noted.

Characteristics	Symbol	Min	Typ	Max	Unit
REFERENCE SECTION					
Reference Voltage (I_O=1.0mA)	I_{ref}	4.85	5.0	5.15	V
Line Regulation (V_{CC}=7.0 V to 40V)	Reg_{line}	-	2.0	25	mV
Load Regulation (I_O=1.0mA to 20mA)	Reg_{load}	-	3.0	15	mA
Short Circuit Output Current (I_{ref}=0 V)	I_{SC}	4.5	60	75	mA
OUTPUT SECTION					
Collector Off-State Current (V_{CC}=40V, V_{CE}=40V)	$I_{C(off)}$	-	2.0	100	μA
Emitter Off-State Current (V_{CC}=40V, V_C=40V, V_E=0V)	$I_{E(off)}$	-	-	-100	μA
Collector-Emitter Saturation Voltage (Note 1) Common-Emitter (V_E=0V, I_C=200mA) Emitter-Follower (V_C=15V, I_E=-200mA)	 $V_{sat(C)}$ $V_{sat(E)}$	 - -	 1.1 1.5	 1.5 2.5	V
Output Voltage Rise Time Common-Emitter (See Figure 3) Emitter-Follower (See Figure 4)	t_r	 - -	 100 100	 200 200	ns
Output Voltage Fall Time Common-Emitter (See Figure 3) Emitter-Follower (See Figure 4)	t_f	 - -	 25 40	 100 100	ns

Note: 1. Low duty cycle pulse techniques are used during test to maintain junction temperature as close to ambient temperature as possible.

ERROR AMPLIFIER SECTION

Input Offset Voltage ($V_{O\ (Pin\ 5)}$=2.5V)	V_{IO}	-	2.0	10	mV
Input Offset Current ($V_{O\ (Pin\ 5)}$=2.5V)	I_{IO}	-	5.0	250	nA
Input Bias Current ($V_{O\ (Pin\ 5)}$=2.5V)	V_{IB}	-	-0.1	-0.1	µA
Input Common Mode Voltage Range (V_{CC}=40V, T_A=25°C)	I_{ICR}	-0.3 to V_{CC}-2.0			V
Open Loop Voltage Gain (ΔV_O=3.0V, V_O=0.5V to 3.5V, R_L=2.0 kΩ)	A_{VOL}	70	95	-	dB
Unity-Gain Crossover Frequency (V_O=0.5V to 3.5V, R_L=2.0 kΩ)	f_C	-	350	-	KHz
Common Mode Rejection Ratio (VCC=40V)	CMRR	64	90	-	dB
Output Sink Current ($V_{O\ (Pin\ 5)}$=0.7V)	I_{O-}	0.3	0.7	-	mA
Output Source Current ($V_{O\ (Pin\ 5)}$=3.5V)	I_{O+}	-10	-15	-	mA

PWM COMPARATOR SECTION (Figure 1)

Input Threshold Voltage (Zero Duty Cycle)	V_{TH}	-	2.5	4.5	V
Input Sink Current ($V_{(Pin\ 5)}$=0.7V)	I_{I-}	0.3	0.7	-	mA

DEADTIME CONTROL SECTION (Test Circuit Figure 1)

Input Bias Current (Pin 4)(V_{Pin4}=0V to 5.25V)	$I_{IB(DT)}$	-	-2.0	-10	µA
Maximum Duty Cycle (V_{Pin4}=0V, C_T=0.01µF, R_T=12 kΩ)	DC_{max}	-	95	100	%
Input Threshold Voltage (Pin6) (Zero Duty Cycle) (Maximum Duty Cycle)	V_{th}	- 0	2.8 -	3.3 -	V

OSCILLATOR SECTION

Frequency (C_T=0.01µF,RT=12 kΩ)	f_{OSC}	-	10	-	KHz
Standard Deviation of Frequency* (C_T=0.001µF, R_T=30 kΩ)	σf_{OSC}	-	3.0	-	%
Frequency Change with Voltage (V_{CC}=7.0V to 40V, T_A=25°C)	Δf_{OSC} (ΔV)	-	0.1	-	%
Frequency Change with Temperature (ΔT_A=T_{low} to T_{high}) (C_T=0.01µF, R_T=12 kΩ)	Δf_{OSC} (ΔT)	-	-	12	%

TOTAL DEVICE

Standby Supply Current(Pin6 at V_{ref}, All other inputs and outputs open) (V_{CC}=15V) (V_{CC}=40V)	I_{CC}	- -	5.5 7.0	10 15	mA
Average Supply Current (C_T=0.01µF, R_T=12 kΩ, $V_{(Pin4)}$=2.0V) (V_{CC}=15V) (See Figure 4)		-	7.0	-	mA

*Standard deviation is a measure of the statistical distribution about the mean as derived from the formula,

$$\sigma = \sqrt{\frac{\sum_{n=1}^{N}\left(x_n - \overline{x}\right)^2}{N-1}}$$

Figure1. Parameter Measurement Information

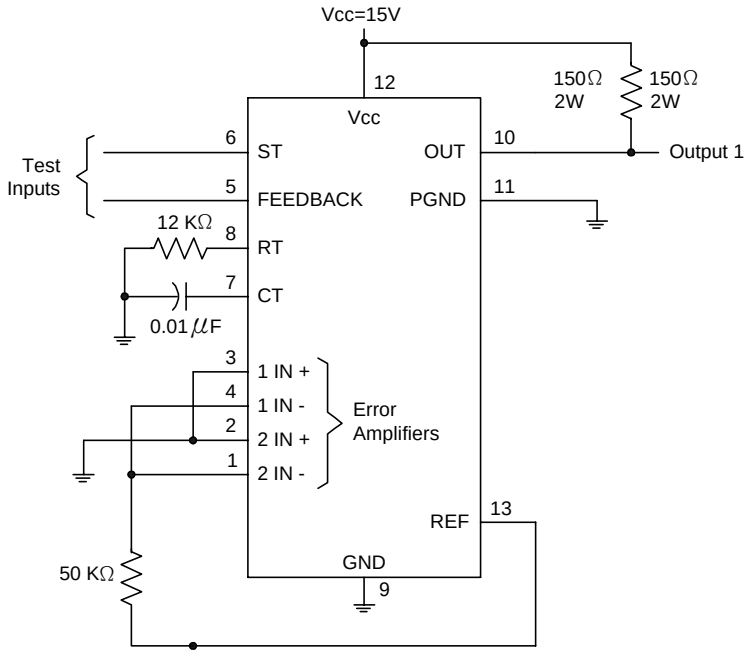

TEST CIRCUIT

Figure 2. Amplifier Characteristics

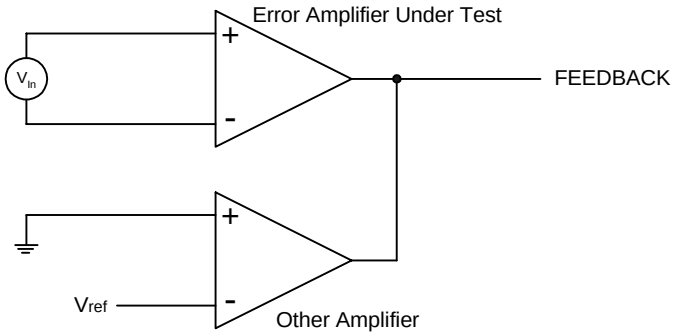

Figure 3. Common-Emitter Configuration

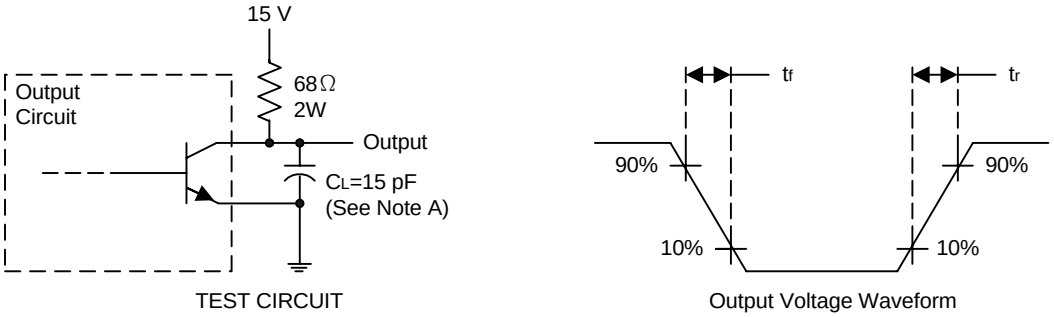

TEST CIRCUIT

Output Voltage Waveform

NOTE A. CL includes probe and jig capacitance.

Figure 4. Emitter-Follower Configuration

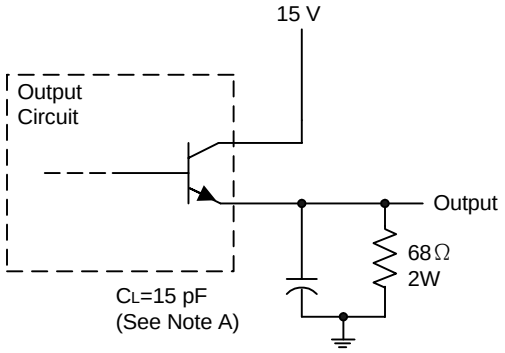

TEST CIRCUIT

NOTE A. CL includes probe and jig capacitance.

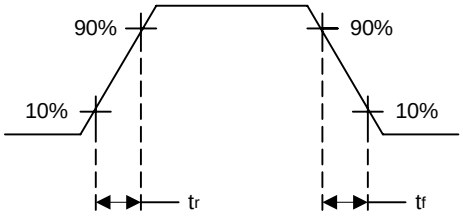

Output Voltage Waveform

Figure 5.

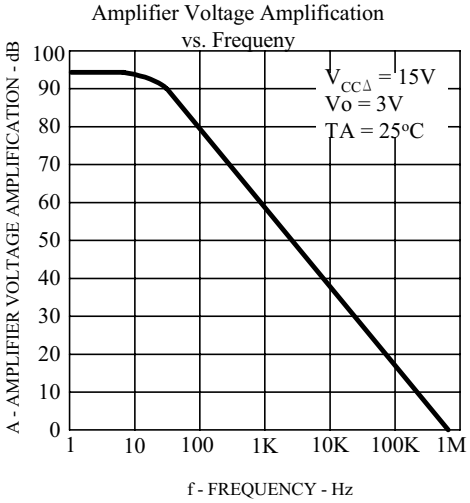

Figure 6.

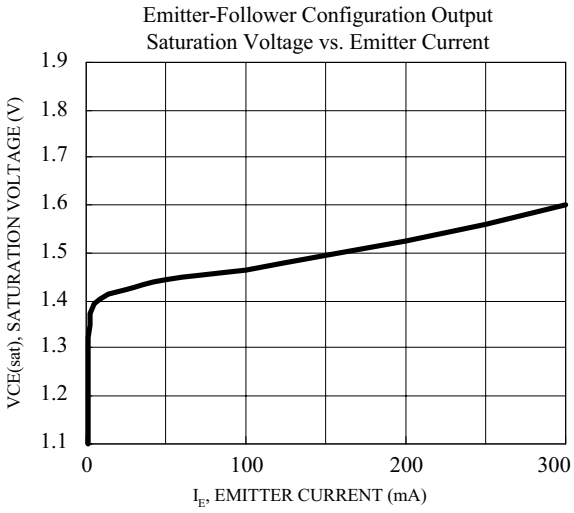

Figure 7.

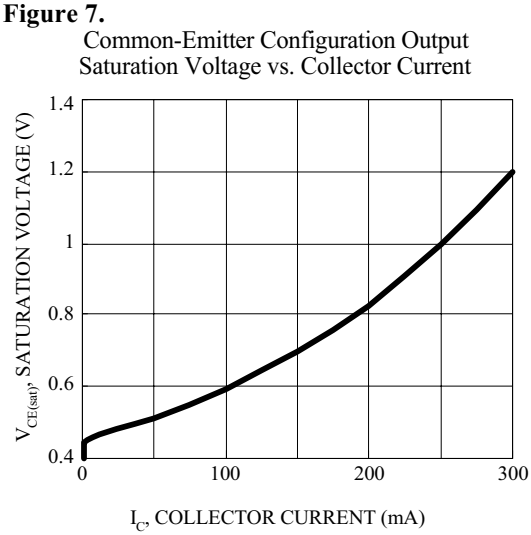

Figure 8.

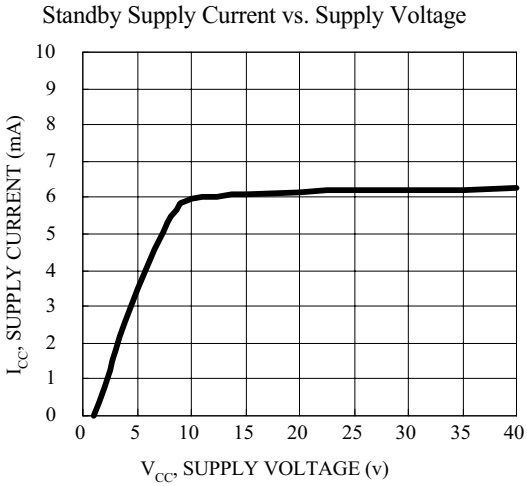

Figure 9.

Oscillator Frequency vs. Timing Resistance

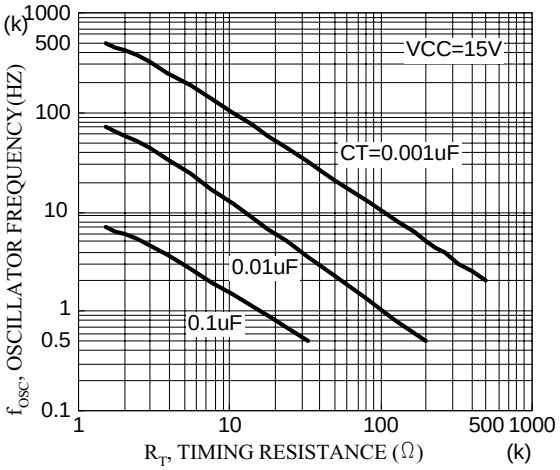

■ Application Circuit

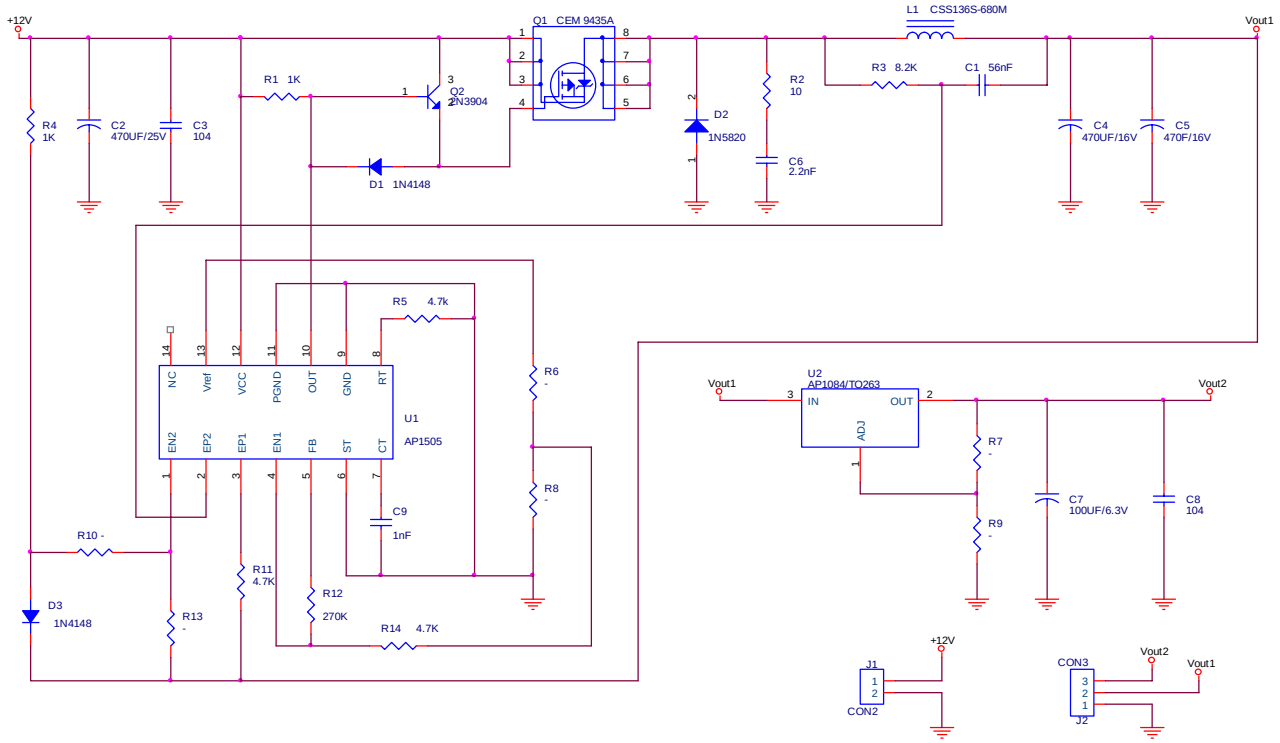

CASE1:

Vout1=5V/1A R6=Short,R8=Open

Vout2=3.3V/1A R7=120,R9=200

CASE2:

Vout1=3.3V/1A R6=2K,R8=3.9K

Vout2=1.8V/1A R7=120,R9=56

Iout(limit) = 0.7 / DCR(L1) * [R13/(R10+R13)]

■ Package Dimension

(1) Package type : SOP-14

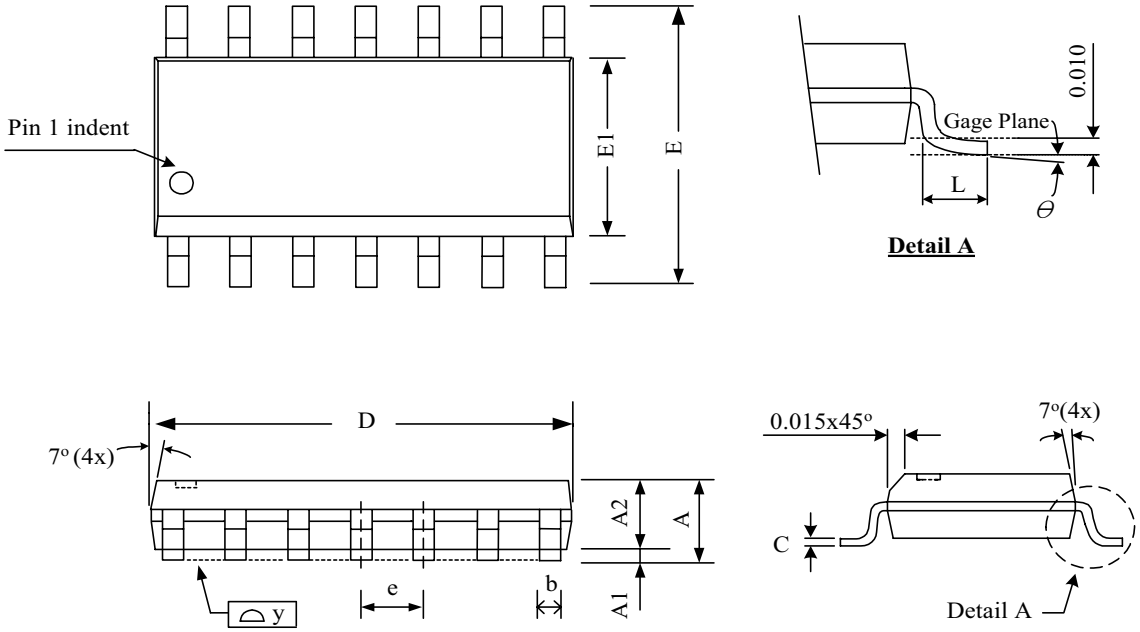

SYMBOLS	DIMENSIONS IN MILLMETERS			DIMENSIONS IN INCHES		
	MIN	NOM	MAX	MIN	NOM	MAX
A	1.47	1.60	1.73	0.058	0.063	0.068
A1	0.10	—	0.25	0.004	—	0.010
A2	—	1.45	—	—	0.057	—
b	0.33	0.41	0.51	0.013	0.016	0.020
C	0.19	0.20	0.25	0.0075	0.008	0.0098
D	8.53	8.64	8.74	0.336	0.340	0.344
E	5.79	5.99	6.20	0.228	0.236	0.244
E1	3.81	3.91	3.99	0.150	0.154	0.157
e	—	1.27	—	—	0.050	—
L	0.38	0.71	1.27	0.015	0.028	0.050
Y	—	—	0.076	—	—	0.003
θ	0°	—	8°	0°	—	8°
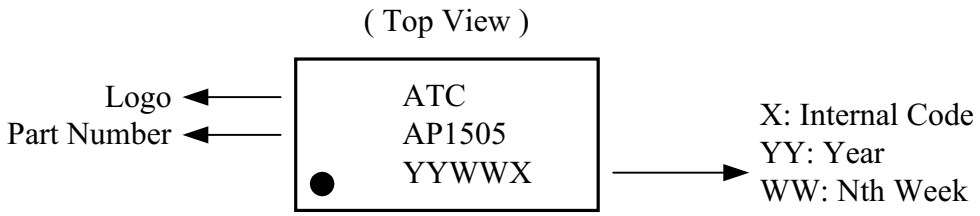
■ Marking Information